OWNER'S MANUAL

DRAGONFLY

32 Swing Wing

Introduction, registration form, receipt document 1

General specifications, drawings 2

Information "before you go sailing" 3

Operating the Swing Wing system 4

Launch and assembly information 5

Sail and trim tips 6

Centreboard and rudder kick-up system 7

Installations: water, toilet, pumps, transducers, seacock 8

Installations: fuel, gas, heating 9

Maintenance and product information 10

Rope diagram 11

Electrical diagram 12

Owner's List, Declaration of Conformity 13

Some of the warranty papers on boat parts 14

Extras 15

INTRODUCTION

We are delighted to welcome you to the family of DRAGONFLY sailors with our warmest congratulations on your new DRAGONFLY.

This manual is meant to help you enjoy sailing and understand the comfort and safety of your boat. The manual describes the boat, the equipment and includes maintenance guidance. Before you and your crew take off to sea, we strongly recommend reading the manual carefully to avoid any mistakes and/or damages. Make yourself at home onboard your boat before going sailing.

We keep improving our boats as we want you to benefit from new technology and breakthroughs, new equipment, materials and, of course, our experience. Therefore, the characteristics and information hereby provided are not binding and can be changed without prior notice or updated obligation.

DRAGONFLY is built with more than 50 years of experience in multihulls, and we feel today that we are delivering a consistent product of high quality and design. Quorning Boats endeavours to deliver a perfect product. If minor problems should occur, we kindly ask you to contact your dealer.

Please keep your DRAGONFLY in respectable condition as well at sea as ashore.

We wish you, your family and crew all the best and lots of fun with your DRAGONFLY 32.

QUORNING BOATS ApS

Jens Quorning

REGISTRATION FORM

Type of boat: Dragonfly 32 Swing Wing
(Trimaran sailboat)

CE-certification: Category A (+ B)

Date of delivery: _____

Name of boat: _____

Homeport: _____

Owner's name and address

Name: _____

Address: _____

City: _____

Country: _____

Registration No

Hull No: _____

Hull ID-No: _____

Engine serial No: _____

YOUR DEALER:

_____

QUORNING BOATS ApS
Skærbækvej 101, DK-7000 Fredericia, Tel. + 45 75 56 26 26, info@dragonfly.dk

DOCUMENT AND RECEIPT DRAGONFLY 32

Hull No: _____ *Hull ID-No:* _____

Owner's name and address

Name: _____

Address: _____

City: _____

Country: _____

Owner of this craft hereby certifies that I have accepted delivery and read the information in the Owner's Manual delivered with the boat – before using the boat.

Date: _____ *Signature:* _____

Hull No: _____ *Hull ID-No:* _____

Owner's name and address

Name: _____

Address: _____

City: _____

Country: _____

Owner of this craft hereby certifies that I have accepted delivery and read the information in the Owner's Manual delivered with the boat – before using the boat.

Date: _____ *Signature:* _____

Before use of the craft, please return this slip to:
QUORNING BOATS ApS, Skærbækvej 101, DK-7000 Fredericia.
If not, Quorning Boats ApS cannot be held responsible of any kind of damage or injury.

General specifications Dragonfly 32 Evolution

Length overall centre hull	9.90	m
Length waterline centre hull	9.50	m
Length folded	11.99	m
Length sailing	9.90	m
Beam sailing	8.25	m
Beam folded	3.85	m
Draft	0.50	m
Draft, incl. centreboard	1.90	m
Weight of standard boat, incl. sails and engine	3,450	kg
Payload max, incl. crew	1,200	kg
Max total weight, excl. crew	5,110	kg
Water tank	120	litres
Holding tank (optional)	60	litres
Fuel tank, diesel	70	litres
Engine, inboard	21	Hp
Mast section total, excl. antennas	16.70	m
Mast height over water level	18.50	m
Mainsail	58	m^2
Standard genoa	29	m^2
Asymmetric spinnaker	110	m^2
Code 0	66.50	m^2
Bowsprit length	2.00	m

CE-Design category	A
Max No of persons in category A	5
CE-Design category	B
Max No of persons in category B	7

Top-view
Dragonfly 32

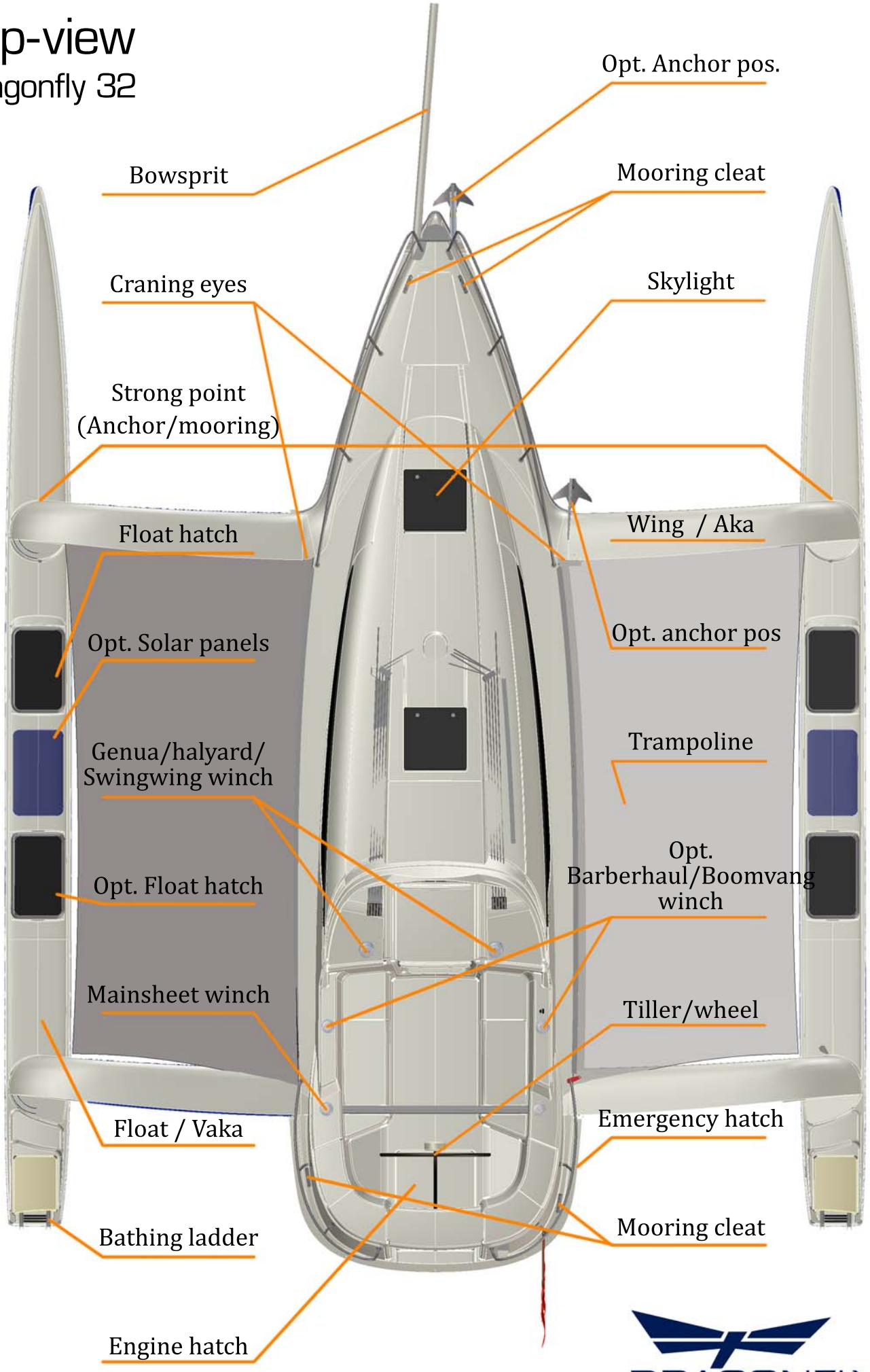

2017

DRAGONFLY
TRIMARANS

Side-view

Dragonfly 32

2017

DRAGONFLY TRIMARANS

Craning hookpoint

Travellift/Single cranelift

Dragonfly 32

When using lifting straps from Qourning Boats, boat must be folded

When using travellift, fold boat out approx. 20 %

Can be craned with or without mast

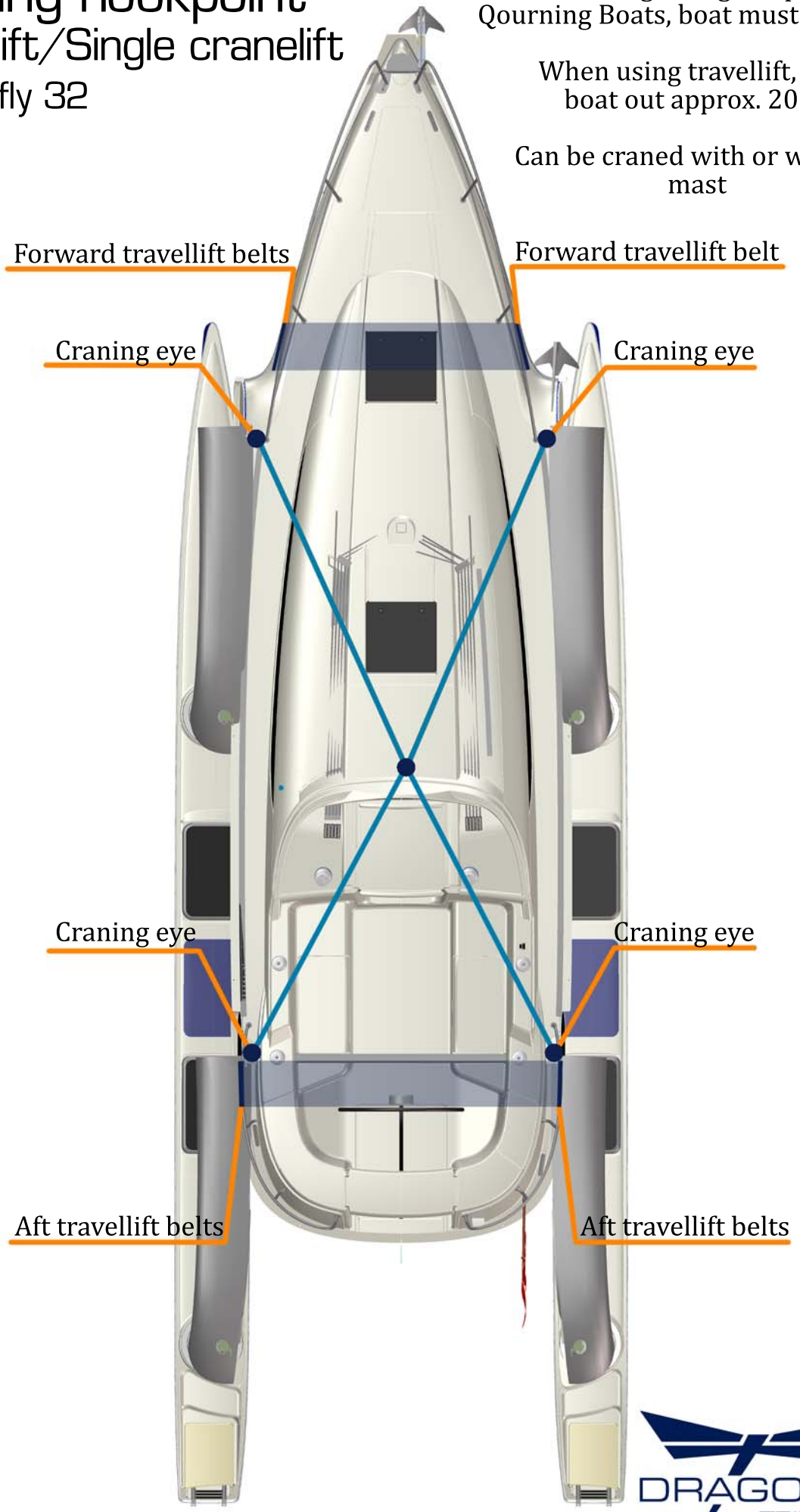

2017

DRAGONFLY TRIMARANS

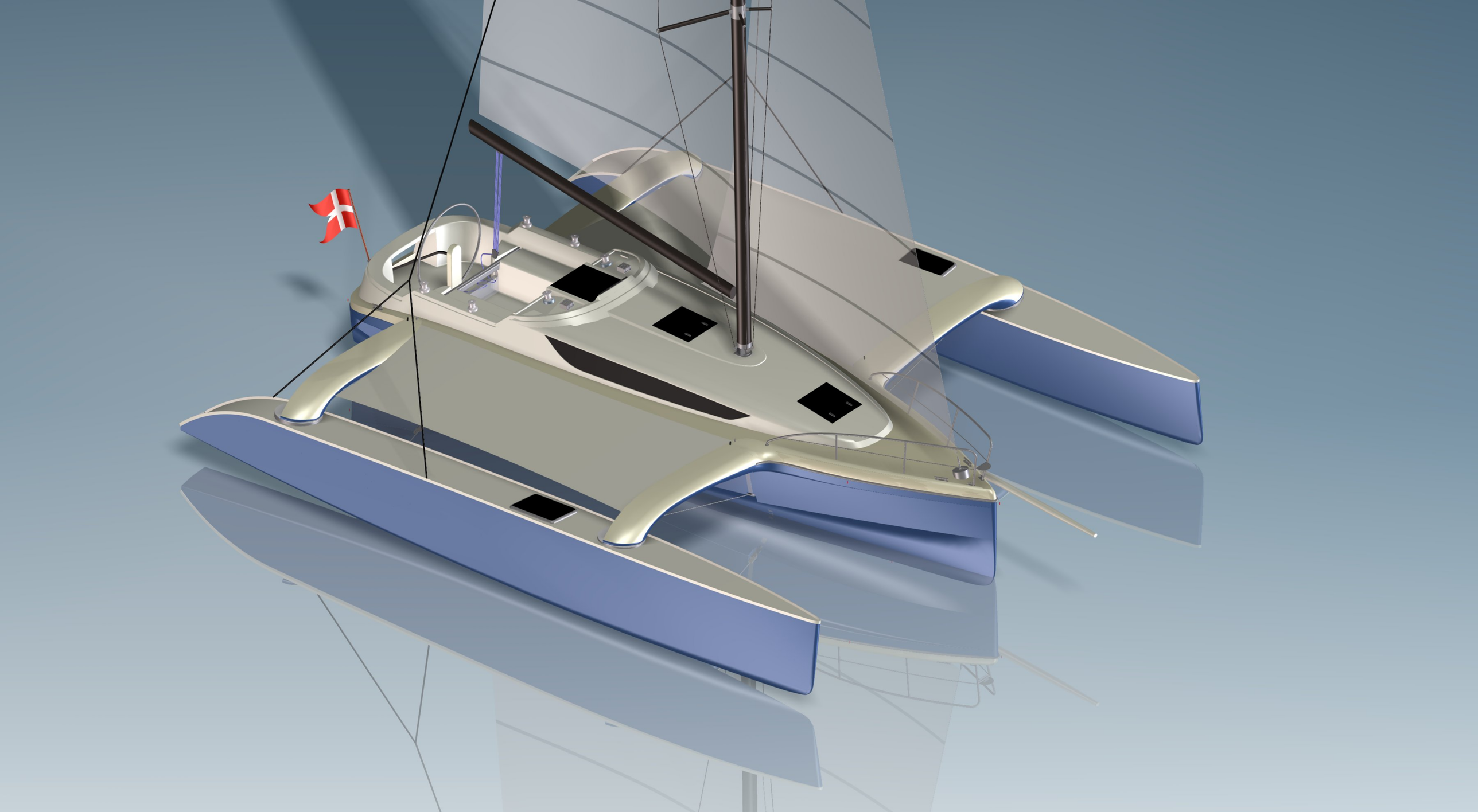

32
DRAGONFLY

CHECK LIST BEFORE YOU GO SAILING:

- Check the weather forecast carefully.
- Check water tank level.
- Check fuel tank level.
- Check the power on your batteries are adequate.
- Check engine oil (and cooling water on the Diesel engine).
- Check and make sure that the water intake filter to the Diesel engine is clean and full functional.
- When starting up the Diesel engine (optional), check and make sure that cooling water is coming out of the exhaust system at the transom (if not, check that sea cork for engine water intake is open – and not blocked) If not, stop the engine.
- For Outboard engine also check cooling water is working perfect by the smaller cooling water outlet higher up on the engine.
- Check that you have enough propane for cooking (for longer trips).
- Make sure that all equipment is stowed correctly and has been secured well.
- Check that water stays and rigging are fully intact.
- Check that ALL hatches + window/escape hatch in the aft cabin, are fully and secure closed – especially on the floats.
- If the boat is new, please note that on delivery, electronics and autopilot systems are not calibrated when the boat leaves the yard and GPS Plotter is not supplied with GPS chart chip.
- Regularly check all the bilges in all 3 hulls for water.

IMPORTANT NOTICE:

Beware of the following:

- Make sure that there always are lifejackets and/or life preservers onboard for the whole crew – and use them!
- Always as minimum, we strongly recommend using lifebelts/harness outside the cockpit when sailing or even motoring at night.
- No persons are allowed on neither trampolines, wings, nor floats when sailing offshore in strong wind conditions.
- High tension/voltage cables. Mast height above sea level is 18.5 metres/62 feet – with no antennas.
- For Ocean crossings, we recommend carrying a life raft in case of fire.
- For Ocean crossings and long distance offshore sailing we recommend all crew to get familiar with the safety hatch in the aft cabin and the function

of this, make sure while sailing that the safety hatch is secure closed but NOT LOCKED with the red buttons on the inside of the hatch.

- In case of capsize stay calmly inside the boat and if necessary you can get out via the safety hatch in the aft cabin hull side. DO NOT try to dive out elsewhere from the boat, as the risk of getting caught in ropes hanging down in the water is too risky.
- By long distance sailing, make sure that all on board are aware of the above-mentioned procedures.
- Make sure to have a knife accessible both inside and outside.

- For long distance sailing or Ocean crossings, make sure to have up-to-date flayers and other safety devices, like Epirp etc.
- For longer crossings – carry on board fx extra impellers, fuel and diesel filters and belts for the engine, and maybe spare parts and filters for the water maker if this is installed on board. Also, make sure to have good strong batteries and safe power supply.
- Make sure that all heavy gear inside the floats are tied well down, so this cannot damage and puncture the floats and cause leaking problems.
- Make sure and check that anchor equipment is secured well and even tie an extra security line on the anchor when you meet rough conditions.
- Always check that float hatches are closed, also while sailing.
- For long-distance sailing, we recommend installing “Jackstay´s”, a safety lifeline in fx webbing materiel to hook on to when going on deck. If this is installed, make sure this is installed correctly, so that you don’t fall overboard but stay on the boat in combination that you harness/lifeline is not too long.
- Please be aware that the trampolines can be slippery when wet, and/or in cold conditions. Further, the trampolines are extra slippery when not pulled tight enough.
- Never walk or be on the leeward trampoline, and/or on the leeward float when sailing upwind and beam reach in +8 knots true windspeed.
- In strong wind conditions, we recommend staying on the center hull only.

IMPORTANT – always also make sure that other crew members on board have been instructed in how to start up the engine and take sails down and have been instructed on how to pick up a person who has fallen over board – could fx be the skipper who fell overboard!

Make sure your horseshoe lifesaver is in good condition and that the light for this is working.

Check that you have a floating line on board, to throw to a person in the water, fx the mooring lines supplied with the boat when it is new, is floating lines!

We do normally not recommend trying to rescue people in the water with sails up.

Be careful that the person in the water do not get close to the propeller.

If you fail to get a person on board, you can also use a halyard, like spinnaker halyard to pull a person on board.

CONTROLLING THE BOAT:

If this is your first multihull, we highly recommend getting some training in controlling the boat while sailing as well as motoring (manoeuvring) before ”taking command” and control over the vessel, to ensure your safety and comfort.
THIS IS VERY IMPORTANT.

Your dealer will give you this first basic information. We strongly advise when receiving the boat, to get to know the boat well first under easy calm conditions, especially also manoeuvring the boat under engine, try this out fx in ”open” water, by first using a fender or similar and manoeuvre the boat around this floating object, get to learn how the boat turns, stops and how it manoeuvres in reverse etc. This is a very very important exercise.
To make good manoeuvres under engine, you ned to use more power to get the boat turning etc. and the better you know how to handle the boat – the much more fun it also is.
This boat is not more difficult to handle than a conventional yacht and many times easier, but it behaves a bit differently. The propeller is when the boat is folded very close to the water line, therefore going into reverse is not as efficient as you may expect. Therefore, do not hesitate to use power in reverse. First gently to get good propeller grip in the water and then use more power. This problem is relevant when wind push you from astern.

IMPORTANT – When the boat is in folded position, the boat and propeller is lifted 8 to 9 cm higher and, when folded, the propeller has even less effect. Test this out well in controlled conditions, so you really get familiar with this. For your information, the engine can motor against the wind in up to 30 knots true wind on flat water and against waves up to 25 knots of wind. If you need to motor against stronger winds, we recommend assisting with only a bit of jib to assist. (no sails if folded).
We recommend starting up sailing with max. 4 Beaufort = 20 knots of true wind till you feel fully comfortable in controlling the boat.

VERY IMPORTANT:
Always before taking the boat out: Pull the centre board fully down for better manoeuvring, without the centre board down, the boat cannot make a sharp turn and will drift much quicker, also powered by engine. And again, check that all float hatches are closed safely.

NEVER set sails before both floats are folded OUT to full beam and backstays are set tight and safety cables are installed on the aft wings.

When folded in, please avoid stronger wind and waves from the side.

CLASSIFICATION:

The DRAGONFLY 32 is classified according to the CE-standards in category A and B with different number of persons allowed on board.

DRAGONFLY 32 is designed for the CE category A Offshore and Ocean trips with max 5 persons onboard, during which the wind may rise to more than max 8 Beaufort on the Beaufort scale = 40+ knots = 20+ m/sec. true wind and the waves may rise to more than 4 m significant wave height.

For CE-certification category B you can also sail offshore with max 7 persons onboard, during the wind may rise to max 8 Beaufort (40 knots/20 m/sec of true wind) and waves may rise to max 4 m significant wave height.

The Dragonfly 32 is certified for the CE by notified organisation (body) IMCI No 0609 under the design module Aa – internal factory control and external control of buoyancy, stability, and flotation.

Sails must be set and respected according to our wind/sail diagram – see section 6.

For long distance offshore sailing and ocean crossings, we strongly recommend the skipper and crew to be quite experienced sailors.

The Dragonfly 32 can well be sailed singlehanded – but this require extremely good sailing skills and experience.

MANOEUVRING AND MOORING – RECOMMENDATIONS:

IMPORTANT NOTICE

Always wear your lifejacket when sailing or even motoring.
In heavy weather wear the safety harness on deck at all times.
Make sure to have functional lifejackets for the whole crew.
When sailing in windy conditions, stay on the centre hull only.

Minimum four mooring lines, of adequate dimensions (min 14 mm x 14 metres) and suitable for the environment should be on board.

- Always only manoeuvre the boat by the engine in harbour areas – NO sails.
- Handle the boat consistent with the current and wind.
- Protect the boat with suitably-sized fenders.
- Always keep the ropes unfold and home.
- Handle the boat at slow speed – in harbour 2 to 4 knots.
- Beware it can be difficult to stop the boat downwind – especially when the boat is folded, where the propeller is closer to the water surface.

DANGER:
Never try to stop the boat with your foot, your hand, or a boat hook.

When taut:
- Protect the ropes from chafing with for example plastic sleeves.
- Make allowance for the tide, as the case may be.
- Make sure to use spring lines on the boat alongside a dock.

PRECAUTION:

- Be well acquainted with the boat before going sailing in more than 5 Beaufort true wind (20 knots – 10 m/sec).
- Learn to handle the boat well under power and to make safe harbour manoeuvring – note that sometimes it can be difficult to stop the boat in reverse downwind.
- Be aware that the boat maybe can capsize in folded condition by winds exceeding 8 Beaufort (40 knots – 20 m/sec). In that case secure the boat/mast sideways, with fx one halyard to each side, this halyard don´t have to be tight just loose/slack so tide is not a problem, or fold minimum one side out and/or both sides min each 75 cm (3”) out, please note that this is only necessary by side winds.
- We do NOT recommend leaving the boat folded on a mooring or at anchor.

- Never moor the boat folded where wave heights exceed max 25 cm (10”)
- Never let the boat dry out in folded position as the seabed can be angled.
- The boat is at all times unsinkable. If anything should happen, always stay with the boat.
- In capsized position the boat will stay afloat approx. at main cabin sofa seat level, if the floats are fully intact and full buoyant.
- By each wing base you will find a stainless eye for lifelines as well in the cockpit sides over the seats.
- For longer offshore passages, life raft is recommended, for example in case of fire.
- All three hulls have watertight crash bulkhead forward to prevent flooding of the hulls, if fx only the very front bow area gets damaged, only the forward section will be partly flooded.
- If Bow thruster is being used – ALLWAYS check there no lines hanging down in the water, like fx the tack line for the bowsprit or mooring lines.

IMPORTANT USER INFORMATION:

- When folding in or out in strong winds, motor up into the wind or even better motor downwind. In strong winds, only downwind, if you have waves.
- Never keep or motor the boat in folded condition where wave heights exceed max 10” or 25 cm, otherwise the folding system can get damaged and by bigger sideway waves (and wind) the boat can even capsize.
- Be aware that the boat can capsize if not handled correctly and sailing instructions are not followed.
- All sails must be down and secured well and safe BEFORE folding.

SAILING BY AUTOPILOT:

- IMPORTANT - Depending on the wind and wave conditions, using Autopilot in winds exceeding 10 m/secs (20 knots) true wind is difficult and boat must here be sailed much more conservative.
- Autopilot can be used in stronger winds, but only when reefed even more conservatively than our “sail to wind diagram”.
- Quorning Boats cannot be held responsible for any damages or problems caused by sailing using Autopilot, as this at times can be unreliable.

IMPORTANT INFORMATION ON THE RIGGING:

- Always check the rigging, halyards, reefing lines, water stays, rudder downhaul and swing-wing system before taking the boat out to sea.
- Every season or min. once a year shorten all halyards, reefing lines and swing wing lines by approx 20 cm/8", if you see signs of chafing on the line. After some years, you can, for example turn these lines around or change these with new lines. If lines are changed, make sure to replace lines with the same quality of lines. Most of these lines are Dyneema quality.
- Standing and running rigging we recommend changing every 10 years using the same quality of products. We recommend changing the water stays after 7 years and/or by max 15,000 NM of sailing.
- Mast rigging/diamond tension is set from the factory on new boats, never change this setting.
- Never use shackles or similar on the boats-man chair without back-up line tied.
- NEVER climb the rigging when the boat is in folded position.
- Tension on the rigging, please see rig diagram. The diamond stays must be checked minimum once a year according to tension diagram as well as before making long-distance trips.
- Never change the tension on the diamonds without checking tension with a tension meter according to rig tension diagram, changing the rig tension can cause the mast to break.
- Never drill holes in the carbon mast section without asking your dealer or Quorning Boats beforehand.
- NEVER wrap the mast in any plastic, as this can cause the paint to bubble up. If covering is needed, use only breathable textile materials.
- When stepping the mast, NEVER secure the mast sideways with only halyards in folding position, as the angle is too narrow – when folded out, it is OK.
- Regularly check that all shackles and blocks are tight and safe, also fx when the boat is new and rigged by the yard or dealer as shackles can quickly become loose.

OPTIONAL WHEEL STEERING:

The cables on the wheel steering are set from the factory – but the cables can by more use become more slack – and must be tightened again later,

simply by the terminal on the cable at the Rudder quadrant itself – simple to do.
If autopilot is used more frequent – this is very important as slack steering cables will make steering by hand and especially by autopilot unsafe.

OPERATING THE SWING WING SYSTEM:

- IMPORTANT – The Swing Wing system must ONLY be used in protected harbour areas. Max. total wave height of 0.2 m. Any use elsewhere at owner's own risk.
- ALWAYS use the Swing Wing system WITHOUT SAILS. The sails must NEVER be hoisted when the floats are folded in, or when operating the folding system.
- ALWAYS pack down and secure the sails safely well BEFORE you start operating the Swing Wing system. Check the furling jib line is closed.
- ALWAYS point the boat into the wind when operating the Swing Wing system, and, or even better point downwind in stronger winds.
- Max. boat speed in folded position under power is 6 knots – more speed can damage the folding system.

Procedure how to fold out the floats:

1. Take away all the fenders and mooring lines.

2. Prepare the endless Swing Wing line by the stainless double block on the cockpit coaming and make sure the line has no kinks.

3. Take the marked "fold out" line three turns around the (electrical optional) winch on the cabin top. If your boat has one electrical winch only, then use the "correct" winch on the same side of where the Swing Wing lines come from and let the swing wing line go around this winch to lead across to the one electrical winch on the other side.

4. Point the boat either up into the wind or even better total downwind.

5. Release (fully up) the double rope stopper in the cockpit side hand locker. The two handles are bolted together so both lines will be open and open this handle FULLY up.

6. Slowly activate the electrical winch to begin with, and the float/ama will start to come out (fold only one side at a time) – normally you can actually almost fully pull out the float by hand.

7. Keep an eye that lines do not jam between the wings and the centre hull. Once again ensure that the endless swing wing line has no kinks. Keep the inhaul line in the hand to prevent kinks, while folding out

8. If something jams – stop winching immediately.

9. When the forward part of the wing almost touches the wing base, it is then fully opened. Check that the trampoline is nice tight. By continued use of the electrical winch, this can damage the Swing Wing system, which is why you have to winch gentle the last bit out (by new boats there is a mark on the line that indicates when the float is pulled fully out).

10. Stop when the trampoline is nicely pulled out and tight. If the trampoline feels a bit too soft – just tighten the “fold out” line a bit more. We recommend marking the line when it´s fully tight and pulled out for faster operation.

11. Now IMPORTANT tighten by hand only the slack of the backstay on the side you just folded out.

12. Do the same procedure on the other side.

13. Now tighten both backstay lines by the main sheet winch and check that both sides approx are pulled similar by checking visually the angle of the side stays/backstays – this does not have to be 100 % perfect. Tighten the backstay´s tight, as much as you can pull easy with one hand on the winch handle.

14. VERY IMPORTANT – When both sides have been folded out, secure and fix the safety cables. These safety cables are a vital part of the Swing Wing system, which you will find at the outer backend of the trampoline where you install the openable snap-shackle in the vacant steel eye on the forward outer end of the aft wing. This safety cable together with the Swing Wing outhaul line system – will hold and secure the boat always when hulls are fully pulled out. If these safety cables are not installed, the boat can/will fold in and collapse while sailing.

15. No persons are allowed on the float/ama and wings when operating the folding system. Keep hands away from the wing/hull joint and moving parts.

Procedure to fold in the floats:

1. First release the safety cables on both port and SB-side at the end of the aft two wings and pull the bowsprit back in if this has been pulled out – and pull both genoa sheets hand tight on the cabin top so the barberhaul block/alloy ring does not get jammed between the hulls when folding in.

2. Prepare the endless Swing Wing line by the stainless double block by the cockpit coaming and make sure the line has no kinks.

3. IMPORTANT - Release now the backstay ONLY in the same one side you are folding in; release the backstay slowly by easing the backstay line around a winch as you can burn your hands on this very powerful line.

4. Take the line marked "fold in" 3 or 4 turns around the big cabin top winch so it is ready to operate. Also, make sure the barberhauler line and the boomwang/preventer lines are released and free.

5. Release the double rope stopper for the Swing Wing system in the cockpit coaming. The float can now be winched in towards the center hull – make sure that the Swing Wing lines do no kinks and ALSO that the backstay line is ALWAYS slack also and can run freely.

6. The water stays "take care" of themselves, just for your information.

7. Immediately stop winching in the float, when the inside rub rail touches the center hull under the wings. Make a marked position on the line for this. New boats are marked on the lines when hulls are pulled fully in. But pull slowly in at the end so you overstress the “pull in lines”.

8. Close the double rope clutch again and take the Swing Wing inhaul line off the winch.

9. When <u>both</u> floats are pulled in again, pull the backstay lines tight only by hand.

We can only also recommend marking the Swing Wing inhaul line when this is pulled into the right IN position. This is done on new boats, but as lines are flexible – this is only an indication.

We are often being asked if you can have other boats tied up alongside in folded position – yes, this ok – but max 3 boats of max 40 feet. In calm conditions, more boats are also ok but NOT in windy conditions.

IMPORTANT INFORMATION FOR USE OF THE SWING WING SYSTEM:

Max tension on the backstays is ONLY what one person can pull by using one hand on the winch handle.

By sailing in stronger wind and wave conditions the leeward backstay will normally get slack – but only pull this slack by hand in the leeward side – never use the winch to leeward, as this can put too much stress and tension on the rigging and cause rigging failure.

The Swing-Wing system must not be operated in winds exceeding 12 m/s or 25 knots true wind speed in open areas and NEVER in any side winds exceeding 7 m/s or 14 knots true wind.

The boat will stay stable folded in a slip as long as waves are max 20 cm/8" and wind speeds from sideway do not exceed 20 m/s or 40 knots of true wind speed. If higher winds are expected either make sure the boat faces into the wind, or secure the mast sideways, by a halyard to the dock with 1or 2 m slack – or, in worst case (like heavy storm or hurricane warning), take the mast down or move the boat to a place, where it can be folded out. Or, take the boat out of the water, take the mast down and secure the boat.

NEVER keep the boat folded on mooring or at anchor.

NEVER let the boat dry out in folded position.

NEVER hoist any person up into the rigging when boat is folded.

NEVER set any sails when folded.

Only use the Swing Wing system in harbour or wave protected areas.

On dry land NEVER fold out by using the folding system only. On dry land, you have to push by hand the float approx half the way out, before you winch it out with the swing wing system. This is due the fact that the floats are missing their buoyancy from the water.

When folding in on dry land, it is VERY important to hold the "fold-out" line in your hand to control that the float does not fall in/down by itself. This can damage the boat, and people around the boat can be injured.

ALWAYS remember to install the safety cables before setting sails. If these are not installed, the boat can collapse while sailing.

Swingwing-system

Dragonfly 32

End of line

End tied to block

Wing stop cable

Prevents folding out too far

Safety cable

Prevents folding in while sailing, to be manually set on-off when folding

Swingwing lines

8 mm Dynema, 27 meter endless

Swingwing cable

Inside trampoline, 6 mm, 483 cm

Rope clutches

Dubble rope clutch in cockpit handlocker

End of line

Line tied to hull

Snap shackle

Locks safety cable
- Important !

DRAGONFLY TRIMARANS

LAUNCHING THE BOAT:

When launching, or handling the boat, for example for transport or winter storage, the lifting eyes and straps/slings are guaranteed to hold ONLY when provided from Quorning Boats and used under the following conditions:

SHORTER LIFTINGSTRAPS AFT AND LONGER FORWARD.

1. Lifting eyes and straps/slings are designed for single crane hook system use only – not for individually use or use elsewhere, therefore all four straps to one crane hook = single point lifting.

2. Lifting straps/slings must not be used elsewhere or for other purposes.

3. When lifting, you must check and make sure that the lifting eyebolts are facing and line up with the lifting straps/slings. If not, this can cause break of the lifting eyes, and for this Quorning Boats cannot be held responsible.

4. Make sure that NOBODY is on or under the boat when craning. If work has to be done under the hull, make sure that your hull safety support can take the full load of the boat, if the lifting straps should fail.

5. The lifting straps are designed for the boat only – NO crew onboard and the bilges MUST be empty. If the total weight exceeds 5000 kg/10,000 pounds, the straps should not be used.

6. No persons are allowed on the boat while craning.

7. Before craning the boat out of the water, make sure to lift up and secure the centreboard and release the rudder downhaul, so this can be lifted up when setting the boat down on the cradle.

8. When craning with the lifting straps, the boat MUST be in folded position. The mast can also stay up – no difference in the balance.

9. IMPORTANT – before launching the boat, (also on a new boat) check that log and depth sounder transducers are fitted correctly in place to avoid flooding the centre hull. Travel lift can be used if this is not too small. Fold first the hulls a bit out. The belts should be mounted ONLY on the centre hull forward of the forward crossbeam and aft of the aft crossbeam around the

centre hull only. Be careful not to get the belt around the propeller if the boat has an inboard engine.

10. IMPORTANT – If lifting straps are somehow damaged, they must NOT be used. Lifting straps must not be used after 10 years from purchase – use otherwise is at your own risk.

CRAINING:

When using travel lift, be VERY CAREFULL not to get the bolt under the sail drive and propeller – this is right under and back of the aft/rear wings/beams.

Only use travel lift belt around the center hull only – NEVER around the wings or the floats.

SAILING TIPS:

MANOEUVRING IN HARBOUR: If the water is deep enough always sail or motor with the swing keel fully DOWN for better manoeuvring and less drifting. The boat manoeuvres the same way in folded and/or unfolded position. Remember the boat is light and by stronger wind, the boat drifts easier than conventional yachts. Please note when the boat is folded in, it can be difficult to stop the boat, because the propeller is now up higher and closer to the water surface.

Get now used to manoeuvre the boat by engine, so you feel comfortable – also when motoring, do not go too slow. You must have enough speed to steer the boat which is normally 2 knots or even a bit more. The more you train this motor manoeuvring process, the more easy and comfortable (and fun) you will find handling the boat under power.

BOWTHRUSTER:

If your boat is equipped with the optional Bow thruster, please remember that this is an electrical engine and cannot run consistent, use it only to adjust the bow position, and not for constant use, you can use it max 3-4 minutes – then let it rest a bit and then use it again. It will also automatically shut down when overheated.

Never motor faster than 5 knots with the foldable bow thruster in down position.

When using bow thruster, there must be NO lines in the water, like fx tack line from the bowsprit or mooring lines as these can get caught in the bow thruster.

No persons must be swimming near the boat when the Bow thruster is active.

For more detailed information on this, please read the Bow thruster “Owner’s manual “.

ASSEMBLY OF THE DRAGONFLY 32 SWING WING

WINGS:
First of all, mount the wings in respective places with the big pin bolts. The pin bolts must be mounted with the thread down, and the nut secured with a Cleves pin. Fold the wings out by holding the wings with a separate extra line diagonal forward.

FLOATS:
Either lift up the float by hand (6 people) or better by fork lift, crane or similar. When mounting the float to the wing – first place a washer and a nut on each bolt inside the Wing. Then tighten the nut at each wing by the big "key" No 32 just so that the floats lie against the underside of the wing, not tight! You must regularly look after and make sure that these are **always** tightened correctly. Before you mount the float, check that the thread on the float bolt is ok by installing a nut by hand only first, this can prevent big problems when installing the float to the Wings. Make also sure the thread is clean and has no sand.

WATERSTAYS: (the big heavy-duty cable form the centre hull and up the Wings)
There are two long water stays for the forward wings and two short water stays for the aft wings. Make sure the thread is clean and use appropriate grease. The thread part of the water stay you turn into the big stainless steel fitting in the end of the wing where the ama is mounted. Then you adjust the water stay so that the water stay is well hand-tight, it must not feel "loose". The water stays must be checked regularly to make sure they have the correct tension and are free from failures. Make sure that the threads are clean and have <u>no</u> sand grains. Use special grease for stainless when installing. Only adjust the water stay's when the floats are folded approx. 75cm backwards.
(The floats must be fitted (installed) on land before adjusting the water stays).

After first season, the water stays normally need only one full extra turn.

IMPORTANT: Water stays must be changed every 7 years or by max. 15,000 NM of sailing.

ALWAYS assemble the boat on land. Never try and assembly or disassembly the boat on the water.

Rigging on the mast itself (spreader and diamond cables) must be changed/replaced by minimum every 15 years and or by max 20.000 NM.

Safety cable under the trampoline is to be changed no later than after 10 years.

Side stays on the rigging + forestay should be changed after max 10 years or by max 15.000 NM of sailing.

If the boat is equipped with wheel stering, we recommend to change these steel cables every 5 years or by max 10.000 NM .

Replace the dyneema halyards in the mast and reefing lines if you see chafing signs into the centre of the line.

For easier mounting of water stays use special stainless thread oil or thread grease in the thread. For easier adjusting of the water stays you can fold the wings back about 50 to 60 cm (2') aft and fit the water stays at this position and they will fit well hand tight, when back in forward position.

If Quorning Boats has adjusted/assembled the boat at the yard before delivery, the water stays normally need min ½ a turn after the first season/summer, maybe a full turn.

NETTING:
The trampoline nettings are marked for either BB (port) or SB (starboard) mounting on the underside forward. Pull them into the netting tracks, starting from aft track alongside the cabin sides and then into the forward wings. The wire in the netting is fastened at the front outside wing by the quick link to the stainless eyebolt on "the wing fitting" – and at the aft wing/main hull connection by the stainless triangle fitting at the push pit base, mounted to the fork toggle terminal in the netting. The Swing Wing cable by the outer end of the aft beam is mounted to the stainless block in the aft outer corner of the netting. Make sure the cable in the netting goes between the "wheel" and the pin bolt in the block. At the forward beam/hull assembly there is a shackle in the trampoline that <u>has</u> to be secured to the centre hull – this is <u>very</u> important. Check regularly that the outhaul cable is not damaged, as this effect the safety of the boat as well as the lines for the swing wing system.

STEPPING THE MAST:
When stepping the mast, if possible, one float should be folded out, which gives more working space and more clearance (slack) to fit the side stays.

You can fold the one side up against the dock, which is the most popular procedure though, so the boat is closer to the dock and the mast crane.

NEVER step the mast with both floats folded, as it is extremely difficult to fit the side stays and rigging, as everything is just too tight.

Remember to secure the rigging bolts in the side stays and forestay with Cleves pins and secure also with rigging tape.

Remember to install the Backstay lines and blocks before you motor away from the dock and set these lines just easy by hand only to avoid the rigging to move in the top from side to side.

FORESTAY AND SIDESTAYS:
Forestay and side stays are mounted in the same fitting on the upper part of the mast, where the four upper diamond stays are. Each side stay is mounted with a 10 mm quick link and 12 mm quick link for the forestay that has to be tightened hard with a wrench and also best to secure with normal Locktite for better safety.

SETTING THE GENOA:
Before hoisting the genoa, make sure to roll some furling line up on the furling drum. Turn the head- foil anti-clockwise until you have only about 2 metres (approx. 6 feet) line left in the cockpit. This way you are able to furl the genoa at once when the genoa is hoisted. The luff is mounted by the shackle over the furling drum. Tension is adjusted via the jib halyard. The genoa/jib halyard is fixed to the movable swivel at the head foil and the genoa top to the lower part of the swivel. Make sure the boat is folded out on both sides before setting sails.

MOUNTING THE MAINSAIL:
The boat is folded out on both sides. The mainsail is placed on the one trampoline and start from the top of the sail. Hold the boat up into the wind. Mount the headboard (the top of the sail) into the top double Ronstan batten car on the mast. Then hoist the sail to the next batten and fit the next stainless bolt into the batten car with the nut on top etc. Use key no. 13 for the nuts on the batten cars.

Remember also to fit the two reefing lines in the sail as you mount the mainsail.

By taking the mainsail off again, **never** take off the Ronstan batten cars away from the mast track, all the balls will fall out – just loosen the 8mm nut on the batten car that is fixed to the batten pocket on the mainsail.
Only set the mainsail in calm wind conditions.

When the mainsail is up, you can easy install the single line lazy-jack system, which also works as a topping lift to hold up the mainsail boom. The lazy jack has only one line, please see a photo of the boat under sail which will easy show this.

IMPORTANT: The reefing line in the back end of the boom comes out from a sheave and through the block in the backend (leach) of the mainsail and is tied with a bolen knot forward of the main sail clew webbing, so it does not slide aft out of the rear boom end, this is VERY important.

REEFING LINES:
The reefing lines are installed along outside the mast, check the reefing lines goes through the big stainless eye at the "Gooseneck" fitting (mast fitting to hold the boom to the mast). The reefing lines stay in/on with the boom at all times – also when the boom is taken away from the mast.

Deck plugs must be greased for better connection and to avoid corrosion. Important is to cover the deck plugs on the deck over the winter, when the plugs have been taken off, so these do not get any water inside.

Be careful the cables at the mast base does not get damaged or caught when stepping the mast AND also remember to unscrew these from the deck plugs when taken the mast off the boat.

SAIL DIAGRAM:

DIAGRAM OF SAIL AREA TO TRUE WIND SPEED:

m/sec.	Knots	Beaufort	Upwind and beam reach
0 – 8	0 – 16	4	Full main + full genoa
8 – 10	16 – 20	5	Main 1 reef + full genoa
10 – 12	20 – 24	5+	Main 1 reef + genoa 1 reefs
12 – 14	24 – 28	6	Main 2 reefs + genoa 2 reefs
14 – 16	28 – 32	7	Main 2 reefs + genoa 3 reefs
16 – 20	33 – 40	8	Main 3 reefs + genoa 4 reefs
20 – 24	40 – 47	9	Main 3 reefs + genoa almost or completely furled – sailing upwind is now difficult
25 – 28	48 – 55	10	Upwind sailing not recommended – only with very good experience

Beware that the mainsail has standard two cockpit-operated reefs only and that the third mainsail reef is optional on the Touring version and standard on the Supreme version.

m/sec.	Knots	Beaufort	Downwind lower than 120 degrees
0 – 10	0 – 20	4	Full main + full genoa or spinnaker/Code 0
10 – 12	18 – 22	5	Full main + full genoa (fx wing/wing)
12 – 14	24 – 28	6	Main 1 reef + genoa 1 reef
14 – 16	28 – 32	7	Main 2 reefs + genoa 2 reefs
16 – 20	32 – 40	8	Main 2 reefs (or no main) + genoa 2 reefs (or less)
20 – 24	40 – 47	9	No main + almost fully furled genoa
25 – 28	48 – 55	10	No sails – maybe use of drift anchor or similar

For a new inexperienced crew, we do not recommend sailing in more wind than max 20 knots or 4 Beaufort of true wind, before knowing the boat better!

IMPORTANT – If this diagram is not respected Quorning Boats ApS and dealers cannot be held responsible for boat, crew and/or gear. Beware that the boat can capsize if not handled correctly. For downwind sailing if "solid" seawater gets over the centre hull bow or float bow – this is the first warning to reduce sail. If winds are "gusty", make sure to be ready to release the sheets quickly – by holding the sheets in your hands.

If the leeward float is almost pressed down in the water to the deck level, this is time to reduce sail area.

Make sure that you know you can trust your wind speed device information and that you are fully sure if this wind device measures the wind speed in knots or m/s (meters per second) and also if you see true or apparent wind speed on the display.

IMPORTANT – Asymmetric spinnaker or Code-O can MAX be used beam reach safely up to 5 m/sec or 10 knots of true wind.

Code-O can MAX be used upwind to 4 m/sec or 8 knots of true wind – use upwind in stronger wind, will damage either the boat or the sail.

Code-O and spinnaker can be used in stronger wind speed if used deeper downwind.

For more information about asymmetric spinnaker and Code-O, see further instructions for these sails under “Sailing and Trim guide”.

SAILING AND TRIMMING GUIDE:

IMPORTANT – It is of great importance always to keep your sheets and halyards tidy when sailing because all lines come to the cockpit. This is a very important safety factor and improves the joy and pleasure of sailing for all on board.

TRIMMING THE GENOA:

The luff tension is to be adjusted by the Genoa/Jib halyard. In light winds, of course only little tension just to avoid wrinkles along the luff. In more wind the luff needs more tension, but only to keep the luff tight, more is not necessary – over tensioning can damage the sail. But if you lose the luff tension too much, the Genoa halyard can be furled around the forestay and damage the forestay and can in worst case cause the forestay to break.

NEVER tighten the Genoa halyard with full load on the genoa sheets.

Under normal conditions the Genoa car on the cabin roof should be placed in the aft end of the track, approx. in the centre of the cabin top hatch. If the Genoa ”closes” in the aft leach, move the Genoa car a bit aft, and if the genoa "opens" further up in the aft leach, pull the Genoa car a bit forward.
On the Supreme version, you can adjust the Genoa car from the cockpit via the Genoa track outhaul on the halyard stopper, and also the Genoa sheet goes through the halyard stopper marked as GENOA.
The “GENOA” halyard stopper is normally ALWAYS left open, and ONLY used if the winch is needed for another purpose. In case you need to put a reef in the Genoa you MUST pull the Genoa car forward for right trim. The Genoa itself has 2 marks on the foot of the Genoa, which is only to indicate 1 + 2 reef position on the furling Genoa.
For “reef 1” the Genoa car is pulled approx. 50 to 60 cm = 2' forward on the track approx. so the Genoa car is lining up with the halyard lead blocks, and for Genoa “reef 2” the Genoa car is pulled further forward 10-15 cm forward of the mast, if the Genoa is reefed more, the traveller is pulled approx. up to the forward end of the track. For your information, only use the barber haul system on beam reach or downwind, never upwind.

- To pull out the Genoa, always OPEN/release the furling line on its jammer/clutch on the cabin top by the other halyards. Then you just pull the Genoa sheet and the Genoa will unfurl and be active.

- ONLY furl the Genoa when the Genoa sheet is released + also the barber haul control line.
- ALWAYS make sure you NEVER leave the boat before the Genoa furling jammer/clutch is 100% safe closed, so the genoa in windy condition does not roll out by itself, with no one on board, this can cause the boat to capsize in folded position.

MAST TRIMMING:

The special Dragonfly carbon mast spreader system is always in trim and adjusted from the yard, but generally the mast must bend approx. 7 cm in the full length.

Do NOT change the trim of the diamond stays, as this can cause mast failure. The mainsail supplied by Quorning Boats is specially designed for this mast curve.

The mast curve looks a bit strange with no mainsail set, as the top of the mast looks like it bends forward, but with full mainsail set, the mast becomes a full nice mast curve – However when mainsail is reefed, the mast curve looks a bit strange, but is normal for this mast design/construction.

USING THE BACKSTAY:

The combined top shroud/backstay has been developed because of the Swing Wing system to enable easy and quick trimming of the top shrouds/backstay´s, when folding.

When sailing ALWAYS set the backstays in both sides to obtain the right tension on the top shrouds (side stays). In light wind, you can set them only easy and lock them in their jammers.

In more wind, set the backstays on the mainsheet self-tailing winch with the winch handle. In heavy wind, you set the backstays on the self-tailing winch as hard as you directly can, turning the winch handle by using one hand only – never pull leeward backstay by force under sail. Only pull the slack leeward in by hand.
The backstay line can while sailing be stored in the aft cockpit locker, so you have less line on deck.

NEVER slack the backstay lines going downwind as this can/will damage the furling system and the forestay.

Downwind, we strongly recommend using a boomvang/preventer for better control of the roach on the mainsail and also so the mainsail does not chafe too hard on the leeward side stay.

REEFING THE MAINSAIL:

Check the lazy jack line is secured in its cleat on the SB side of the boom (works also as topping lift). To reef the mainsail, you loosen first the mainsail sheet and thereafter the main halyard and it is recommended to mark on the main halyard where ”reef 1” and where reef 2 has to be locked or fixed on the rope clutch (Constickter). The main halyard is loosened/opened and released to its mark, and the reef line is pulled hard so that the reefing block by the luff is approx. 15 cm = 6" above the boom.

IMPORTANT - when reefing the mainsail, continue upwind by the genoa, and ease off first completely the main sheet, then the main halyard is loosened till the mark reef 1 and then you pull the line reef 1 which is marked on port jammer/clutch. This line will then automatically reef the luff first and then the leach. Same procedure applies to reef 2 and the reverse when reefing out. After each reef the sail can to be ”packed” with chock cords for less wind resistance, not a must.

Pulling the reef line, procedure is completed when the reef block in the aft leach is touching the boom. Check that the reefing block forward at the mainsail luff is approx. 10 or max 15 cm (4” to 6”) over the mainsail boom.

Check that the reefing block at the luff is not chafing the sail. Normally, it does not, but sometimes you have to go up and "arrange" the sail at the luff.

On the Dragonfly 32, there are only two big reef positions in the main sail. For Ocean crossing we recommend a third reef in the main sail on the Touring version, the Supreme version always have 3 reefpoints in the mainsail if supplied by the yard.

For long distance sailing, we recommend to prepare a reefing line from the extra third reef on the mainsail down to reef II, so you easier can control the third reef by hand. When using the third reef, the conditions are of course not the easiest.

Please avoid reefing downwind, as the mainsail can be blown past on forward of the side stays and also brake the battens. Of course, if there is no other way out, you can do it – but this is not to be recommended.

MAIN SAIL:

The mainsail needs much more trimming than on a monohull, especially on the mainsheet as the boat has many speed potentials, depending on the wind speed. This calls for concentrated trimming if you want maximum speed and fun with your boat. Generally, the leach seen from the backend of the mainsail boom end to the mast top must be almost straight, no matter what wind force: the roach must absolutely not ”fall out” or twist unless the boat is pressed too hard. Trimming the main in a breeze takes great effort for maximum performance, but makes sailing more fun.

If the mainsail overpowers the boat upwind, just ease the mainsail traveller approx. 15 – 20 cm to leeward (6”-8”).

Going upwind in stronger wind conditions we also recommend to open the mainsheet – .

By tacking upwind against waves – we recommend easing the mainsheet and or the main traveller to make an easier tack – if the mainsail is too tight - the boat will too quickly go into the wind again and it is hard to finish a tack procedure, here it is also vital that the genoa is being pulled in tight quickly.

TACKING:

When tacking with the boat, it sometimes helps to ease off the mainsheet a little (especially in strong winds and waves). If you stall the boat after a tack it also helps to ease the mainsail until the boat builds up speed again. If the boat starts to go backwards after a tack, then immediately turn the rudder blade reverse to windward, this helps the bow to bear off again and get wind into the sails again. Do not turn the rudder to ”normal” again until the boat starts moving forward again.

MAINSAIL FOOT:
- is trimmed normally. Light wind when tacking, light curve approx. max. 12 cm = 5'. Downwind, big curve. Medium air tacking, flat foot. And downwind, large curve. Hard wind tacking, flat foot max. 10 cm = 4', and downwind also flat foot - this has little effect only and it is much more important to focus using main sheet

and preventer (boomvang). We at the yard normally set and adjust the foot in only ONE and same position approx. 7 cm curve (3”) always.

MAINSAIL LUFF TENSION:

In light wind, you set the main halyard easy only to avoid "wrinkles" in the sail, which has the effect that you easier can help the mainsail flipping over when tacking, so that the battens are turned right for the new tack. We would here recommend accepting a few ringlets in the mainsail luff.

In medium air the main halyard is tightened even harder, so that the wrinkles in the mainsail are gone and the luff straight.

IMPORTANT:
In heavy winds the main halyard is tightened quite hard to flatten the sail and avoid wrinkles in the luff – luff wrinkles can sometimes not be avoided. By tensioning the mainsail luff upwind in winds exceeding 6 m/s (12 knots), you must ease off the main sheet when tensioning the luff.

If for example you are anchoring or beaching for a short time with the main sail set, then loosen the main halyard a bit to release the tension in the mainsail luff, and the mainsail will not so easy catch the wind.

In stronger wind conditions wrinkles, cannot be avoided in the mainsail luff, just too must power – BUT you can fx use the reef no. 2 line at the luff by tying the reef 2 line to the webbing in the mainsail and use the reef 2 line as a Cunningham – this way you can better control the luff of the full mainsail.

MAINSHEET TRAVELLER CAR:

Multihulls have normally a rule that goes: the mainsheet car must NEVER pass the centre line to windward. If the wind is increasing when tacking upwind and you find the mainsail has too much power and whether helm, try and ease out the traveller, approx. 10-15 cm = 4-6" to leeward instead for slackening the mainsheet and therefore not make the mainsail deeper. Doing this the boat can take more wind without reefing. Eventually you can also ease off the sheet and "open" the roach further up in the mainsail.

IMPORTANT – when jibing in stronger wind conditions, make sure to make a fully controlled gibe, which means, set the traveller car in the centre and pull the mainsheet fully in centre, as you gibe. After gibing, quickly ease off the mainsail sheet again and set the boomvang/preventer again. If you are not careful when gibing in strong winds, you can damage the mainsail or, even worst case, the rigging.

If you have wheel steering system – it is even more important to make controlled gibing – as the mainsheet can catch the wheel pedestal and damage this – so this calls for even more focus when gibing in stronger winds.

SETTING AND FIXING THE BOWSPRIT:

The optional bowsprit has to be set manually.
You go forward and open the anchor locker – you push by hand the bowsprit forward – check the tack line is always loose when this is done – when the bowsprit is out of the tube in the port side of the anchor locker, you pull the bowsprit towards the centre, and you fix the bowsprit in its position fitting that you clearly see back in the anchor locker – and now you fix the bowsprit with the stainless pin in the stainless fitting – and now very IMPORTANT – the SB side bowsprit support line is automatic fixed at all times – whereas you HAVE to remember to lock the port bowsprit side support by the aft forward wing.
If the bowsprit is not fixed here – the bowsprit will brake immediately or even, make serious damage to the centre hull.

Remember to also bring in back the bowsprit before you fold in the hulls again and at the same time pull the tack line tight again so this does not get caught by the bow thruster.

ASYMMETRIC SPINNAKER SAILING:

Sailing with the asymmetrical spinnaker is a fantastic third dimension in sailing, which a lot of people dread, caused by bad earlier monohull experiences. On a trimaran, asymmetric spinnaker sailing is fun and a comfortable adventure. A trimaran is not heeling over from one side to the other (rolling), and the spinnaker pole is nonexistent. With a little practice, you can actually handle the spinnaker alone, but always handle it with respect!!! If you respect the spinnaker and use it with reason it is great – also when cruising.

SPINNAKER SHEET:
Is led from the cockpit to the block on the outer top middle of the aft wing and directly <u>inside</u> the top shroud/side stay to the spinnaker clew and "inside" between the spinnaker luff and the forestay. This is best and prevent the sheet from falling in the water in front of the boat.

SETTING THE SPINNAKER:
You can best set the spinnaker either from the leeward trampoline or directly from the leeward float hatch. Make sure the lines run correctly, that the spinnaker halyard for example is not twisted round the forestay or the diamond spreader. IMPORTANT - keep sailing downwind and hoist the spinnaker in the sock behind the mainsail in the big "wind shade" downwind.

CAUTION – If you feel any resistance hoisting it or sheeting it, stop pulling immediately. Pull up the spinnaker to the halyard sheave box and then pull or set the spinnaker sheet, so the spinnaker does not get air too early, not tight, and now pull up the sock, when the sock is about half way up – pull out the tack to the bowsprit – then pull up the rest of the sock and fix the line you pulled up the sock with, just somewhere convenient on the mast or on a halyard on the deck.
Then luff up a bit, and when the spinnaker fills up, roll up the genoa. It is very important that your spinnaker fills first or you will find yourself furling the spinnaker into the genoa. It never pays sailing with both genoa and spinnaker at the same time.

GIBING WITH SPINNAKER:
Go fully downwind and KEEP the mainsail here, DON'T pull over the main yet – pull over the endless spinnaker sheet, so you now see the spinnaker clew 2-3 metres (6 feet) on the windward side and now SLOWLY jibe the mainsail, while you keep pulling the spinnaker sheet – you will see that it works perfectly. Important is to start pulling over the spinnaker before you jibe the mainsail.
If you sail alone – pull the spinnaker full to windward before you gibe.

For downwind sailing like 160-170 degrees, we recommend to pull the tack of the spinnaker to windward, by using the windward genoa barberhauler line that you find on the foredeck of the float – fix the barberhaul line to the tack of the spinnaker and with the barberhauler you can now release the tack line and pull the spinnaker to windward to the windward float, but downwind make sure to have 60 to 70 cm distance between the flatbow and the spinnaker. Only use this system for longer distance downwind.

Sailing downwind, it is actually a perfect course if you line up the Windex arrow with the leeward Windex marker/arm (the Windex have two arms facing back) this way you will find that you are sailing basically 160 degrees downwind – which is the best you can do when the spinnaker is pulled to the windward float.

TAKING DOWN THE SPINNAKER:
NEVER sail the spinnaker without main sail!!! It can become very difficult and dangerous to get it down without the wind shade behind the mainsail.

If the wind increases, it is a bit more difficult to take down the spinnaker. Practice can eliminate this problem. Prepare the spinnaker halyard and tack line and the sheets so that these lines can "run" out without any problems.

Bear off to full downwind, ease out the mainsheet and fix the mainsail boom with the preventer/boomwang. Now pull the spinnaker sheet tight in behind the mainsail – and you will see that the spinnaker completely has no wind and no pressure because of the wind shade from the mainsail –

Now slacken/release the bowsprit tack line completely off first, and the spinnaker now easy fly back and automatically in behind the mainsail like a flag– yes and even in stronger winds it will do this - now from the trampoline netting you pull down the sock close behind the mainsail, this is very easy and is no stress.

This way you can control the spinnaker, easily and elegantly. Now you can ease off the spinnaker halyard and pull the spinnaker and sock down. Do not ease off faster than it is pulled down controlled, so it does not drop into the water.

NEVER ease off the leeward spinnaker sheet when taking it down.

IMPORTANT – ALWAYS gibe "between" forestay and luff of spinnaker and bowsprit.

Spinnaker sailing is great and fun, BUT and again BUT always make sure you have enough water and space to leeward, so you always can go more downwind if the wind increases and so you always have enough water and space to go downwind and take down the spinnaker in no stress – if you don't have enough water and space to leeward, this can get you into a lot of trouble – this is the only real important thing to always make sure is ok when sailing with the spinnaker –enjoy it ☺.

Normally, we recommend downwind course approx 160° with a jibing angle of 40° - in stronger winds it pays of well to go even deeper downwind. For longer downwind course, pull up the centreboard half way or even full up.

CODE – O:

This is a fantastic but a VERY powerful sail. Only use this upwind in light airs like upwind in max 4 m/s (8 knots) true wind. Upwind in light airs you will only be able to point like 50 to 55 degrees and when tacking upwind you have to furl the sail in – tack – and furl out again.

Going upwind you need to sheet close to the main hull on the "inside" aft beam there is a padeye for the Code-O.

IMPORTANT – On the SUPREME version never set the Code-O with the tack line system on the bowsprit – use the free top stainless eye you see just over the side support stays and the waterstay – here you install the Code-O furler directly in this steel eye which also prevent the furling system to turn around when furling.

So, when setting the Code-O, pull in the bowsprit, and fix the furler to this steel eye and pull out and set the bowsprit again. On the TOURING version, the tack line sets the Code-O.

Pull up the Code-O, for the TOURING version use the spinnaker halyard and for the SUPREME version there is a special Code-O halyard available and must be used – do not use the spinnaker halyard as this is set too high for the Code-O on the mast. Remember to install the Code-O sheet before hoisting the sail.

Set the Code-O luff tight and make sure to immediately install the endless furling line system, which you lead back on the boat and fix this with the chock cord on the furling line where convenient. When the endless furling line is in position – make sure to fix the one furling line that now is furling the Code-O, either on the forward mooring cleat by just one turn around the cleat or even more simple just fix it with one turn around one of the forward lifting eye's. This is very important so you avoid the Code-O to furl out.
To furl out the Code-O, just release or open the furling line and pull the Code-O sheet – and you are now sailing.

Going beam reach, maybe use both sheets on the same side, this way you have one sheet in the Code-O sheet block and the other sheet in the spinnaker block, this way you can better adjust the sheeting more open or closer – works well.

FURL IN THE CODE-O:

NEVER furl the Code-O when going up into the wind – ALWAYS furl the Code-O in when going downwind – this makes it much easier and safer. Again, remember to "lock" the furling line.

To make the furling system better work over time – always furl the Code-O in the same direction – this is better for the torsion Code-O luff line.

ANCHORING:

The anchor bracket is designed for max 16 kgs anchor.

Use chain (8 mm diameter) or 14 mm rope with internal lead up front. Recommended length of anchor line should be 5-10 times the depth – depending on the depth and the condition of the seabed.

PRECAUTION - Before anchoring check first the weather forecast.

Thereafter the depth of water, current and nature of the seabed.

By beaching or drying out the boat beware of rocks and stones, ONLY beach the boat on clean sand.

When anchoring, we recommend securing the anchor line to one of the front mooring cleats and to make a bridle, which you can fasten on the U-type big stainless padeye on the front of each forward wing. Using a bridle prevents the boat from "fishtailing". This bridle is each side approx. 6 to 7 meters long.

ALWAYS anchor in protected areas!!

Note that multihulls have more windage than conventional yachts.

By anchoring off the stern, the engine should be stopped to prevent the anchor line from getting into the propeller.

IMPORTANT – if your Dragonfly 32 is equipped with a bowsprit, pull first back in the bowsprit, before you set the anchor, as this does conflict.

The anchor is close to the bow, so be careful the last bit when the anchor comes out of the water and up to the anchor fitting.

When using anchor and chain via windlass in + 15 knots wind we recommend using a chain hook with a line so the windlass is not in function. The electric anchor windless is not designed to hold strong force – please read the manual for the windless – windless is optional and therefore not installed on all boats.

When using the anchor and the windlass system from the center hull bow, it is very important after launch to check that anchor has grip, to setup an anchor bridle on the anchor line.

A trimaran always fish tale a lot (moves a lot from side to side) and to prevent this, you install a line from each forward wing (beam), not on the float, but from the bigger stainless U-bolt on the wing out by the float. Here, you fasten a line approx. 6 to 7 meters and fasten or tie to the anchor line from both sides. This way, the boat will stay stabile when resting at anchor.

The reason why this is so important, is due to the fact that the boat fish tale so much, this can actually damage the stainless anchor fitting and bend this.

If you are not able to make an anchor bridle, then move the anchor line up to the cleat you use for normal docking.

When anchoring from the center hull without a bridle, the bowsprit must be pulled in, as the anchor line will catch the bobstay going down to the lower part of the bow.

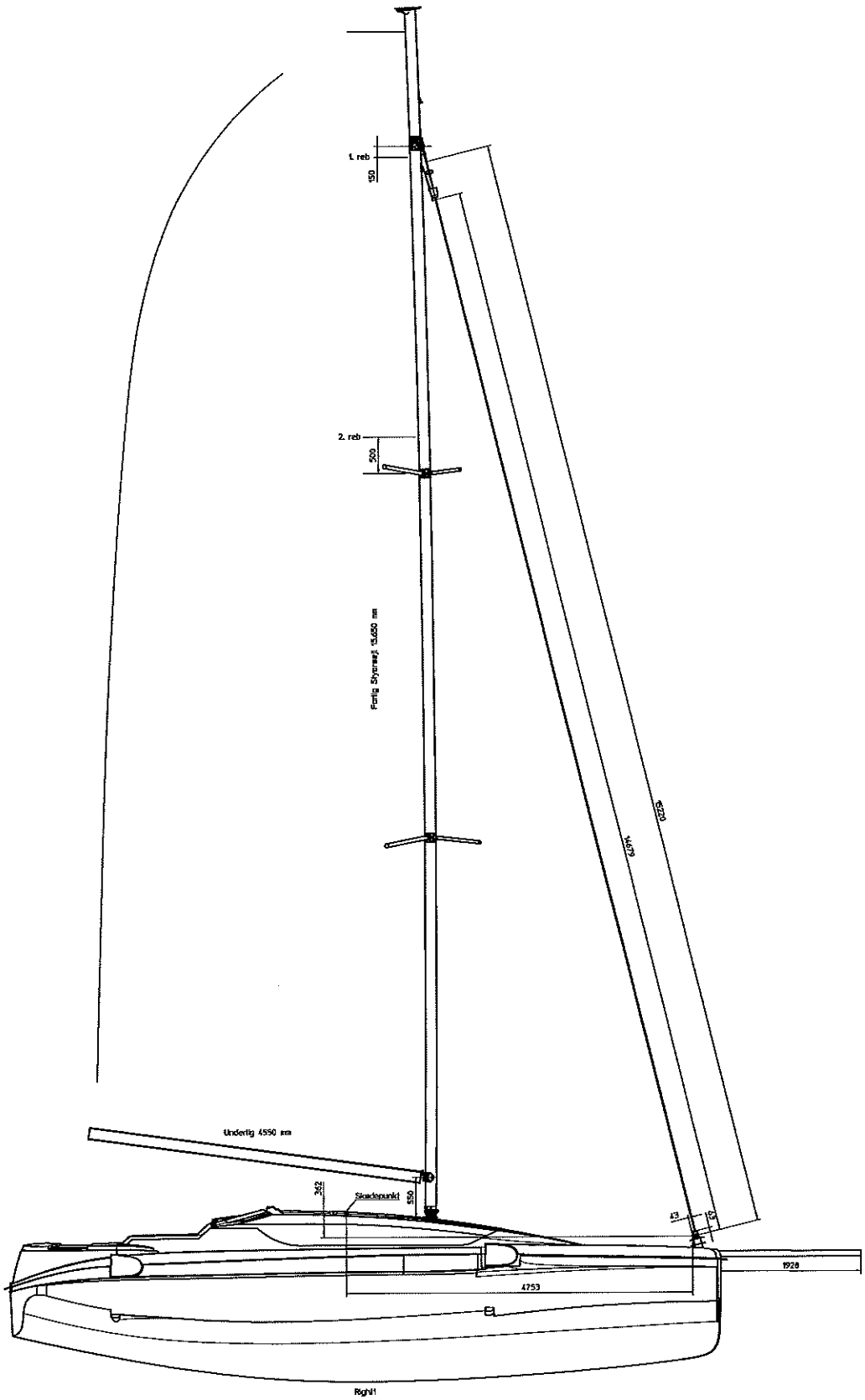

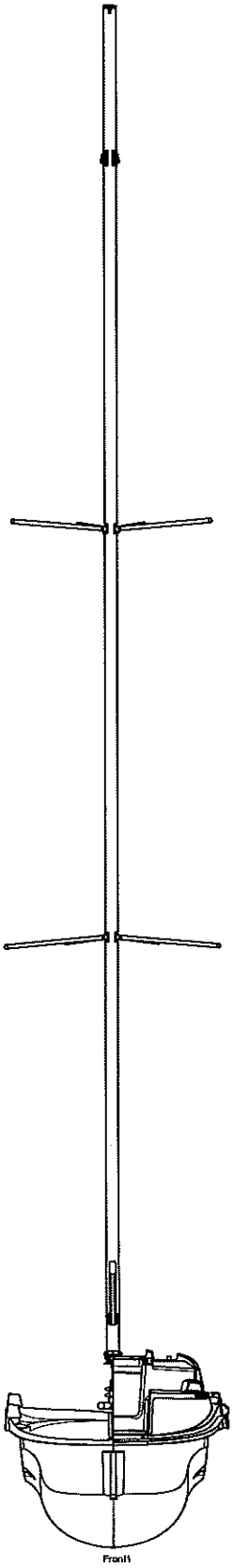

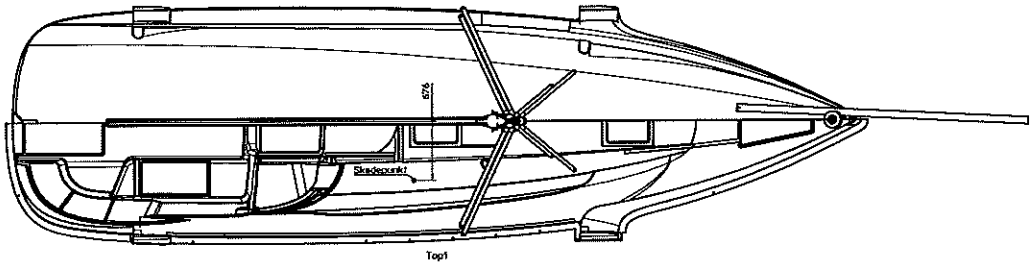

Sejlregning
Dragonfly 32 supreme
Quorning Boats

Dato: 280813
Version 2

DRAGONFLY 32, Loaded Displacement Condition, Righting moment

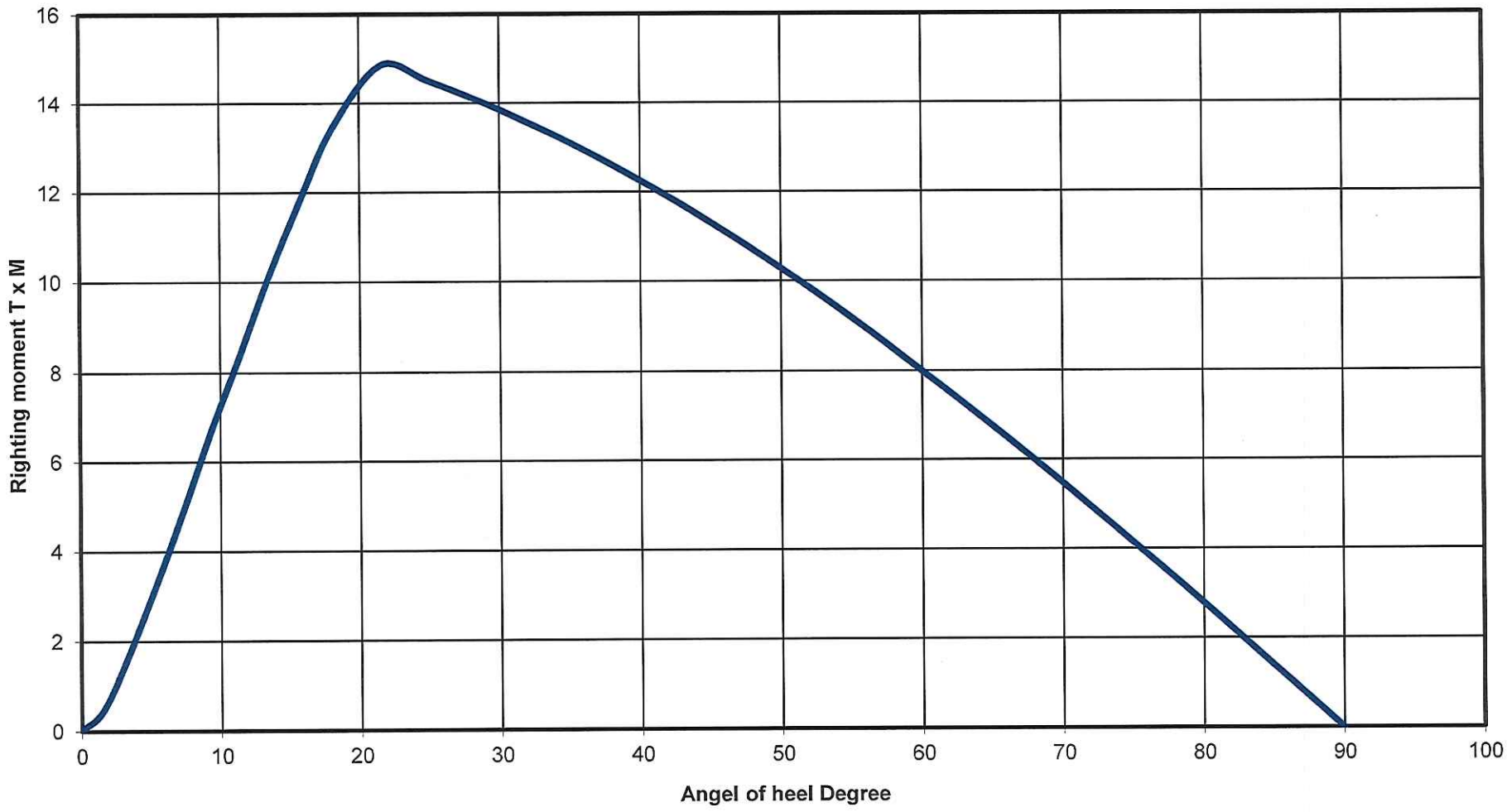

SWING KEEL – KICK UP SYSTEM (centreboard):

The centreboard has been constructed in such a way that even the slightest touch of ground makes it kick up automatically, via the special release cleat on the port cabin top aft. After this has released, to put it back in position, just push down the folding cleat by force again and it will go back in active position again.

Generally, when using the boat by engine or sail, we always recommend placing the centre board all the way down. On a longer course beam reach half way down will also do fine and sailing downwind pull it fully up in normal conditions. In stronger winds never pull it more than half way up.

IMPORTANT – do remember, though, lowering the centreboard before going upwind again. Under sail pressure you CANNOT possibly adjust the centreboard neither up or down, you will have to either luff into the wind or bear off to dead downwind to adjust the centreboard. Downwind you will seldom find adjusting problems.

By trying to pull the centre board down while sailing, you can break the blocks or control lines to the centre board system.

The centreboard, if fully down, when the knot on the “board up” line on SB-side is touching the lead eye – <u>never</u> change the position of this knot, as this adjusts the position of how far down the centreboard max can go down safely. Please see centreboard diagram.

<u>Always</u> make sure that the "board up" line is released when pulling the board down.

When craning the boat, remember to pull the centreboard up and fix the “board up” line in this Cam cleat.

To take out the centreboard, the boat has to be in a crane. Lift the centreboard up and unscrew the stainless bolt on the front of the centreboard, you can now lower the centreboard slowly and the centreboard will drop out of the centreboard casing. Please see drawing below.

To install the centreboard is the same procedure in reverse.

Centerboard-system

Dragonfly 32

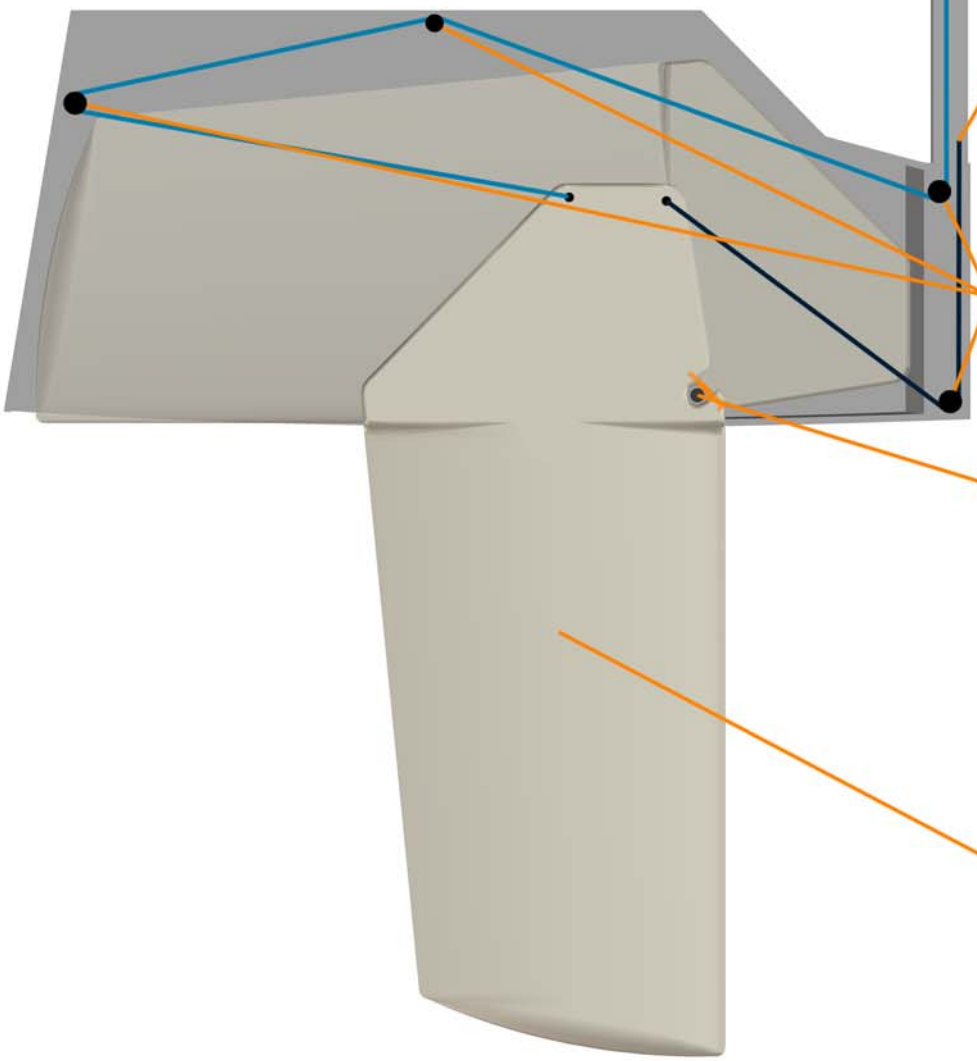

Mast support

Lines going to deck through mast support

Board down line

6 mm dynema - 7 meter long. Connected to 10 mm Herkules line over deck

Board up line

8 mm dynema - 10 meter long

Pulleys

4 x turning blocks

Pivot point

Locked around the pivot point by a locking bolt. 100 mm Allen screw 12 mm. Can be removed from underneath when board is up

Endstop

When board is down a knot on “board up line” prevent the board from going to far down. Very important

2017

DRAGONFLY TRIMARANS

RUDDER SYSTEM:

The rudder also has a ”kick-up” system, so by hitting the ground the rudder will always kick up. The downhaul line and release cleat is placed on the stainless rudder head fitting.

IMPORTANT – Be sure that the rudder is always fully down in position, otherwise the rudder gets hard weather helm. To pull it hard down, take the rudder downhaul line up to the SB mainsheet winch and pull the rudder downhaul line a bit hard and secure and push by your fingers the rudder downhaul line, while it is under load, into the release cleat on the top of the rudder fitting.

Maybe mark the line so you can easy visually check the rudder is fully down – again this is very important.

Do regularly check the downhaul is ok and not damaged. The rudder system is NOT designed to be used while sailing in no other position than fully down, otherwise the rudder system will bend and become loose or even break off.

To pull up the rudder, first release the downhaul line and pull the lifting line in the back. Also, regularly check the bolt where the rudder is bolted to the rudder head, that this nut is tight.

Always make sure that the downhaul line is always ready to release with no kinks or knots on the line and that the line can be lead into the aft locker via the drain hole.

When fx beaching the Dragonfly, just beforehand release the downhaul line fully, so the rudder goes up by itself when it touches the ground and then pull it up, it is a big rudder and not designed to go easy up and down like on a dinghy.

The automatic quick release cleat can be adjusted lighter and/or harder, if needed.

If the rudder is bolted too tight, it can be difficult to move it up and down – just bolt it easy tight, so there is no slack sideways in the rudder.

Boats with wheel steering are equipped with an extra external emergency tiller to be fitted just over the rudderstock, in the backend cockpit floor. The emergency tiller is to be found on the bulkhead in the engine compartment.

We recommend leaving the rudder in the water when moored in the marina, and this is no problem as the rudder is treated with antifouling.

Rudder-system

Dragonfly 32

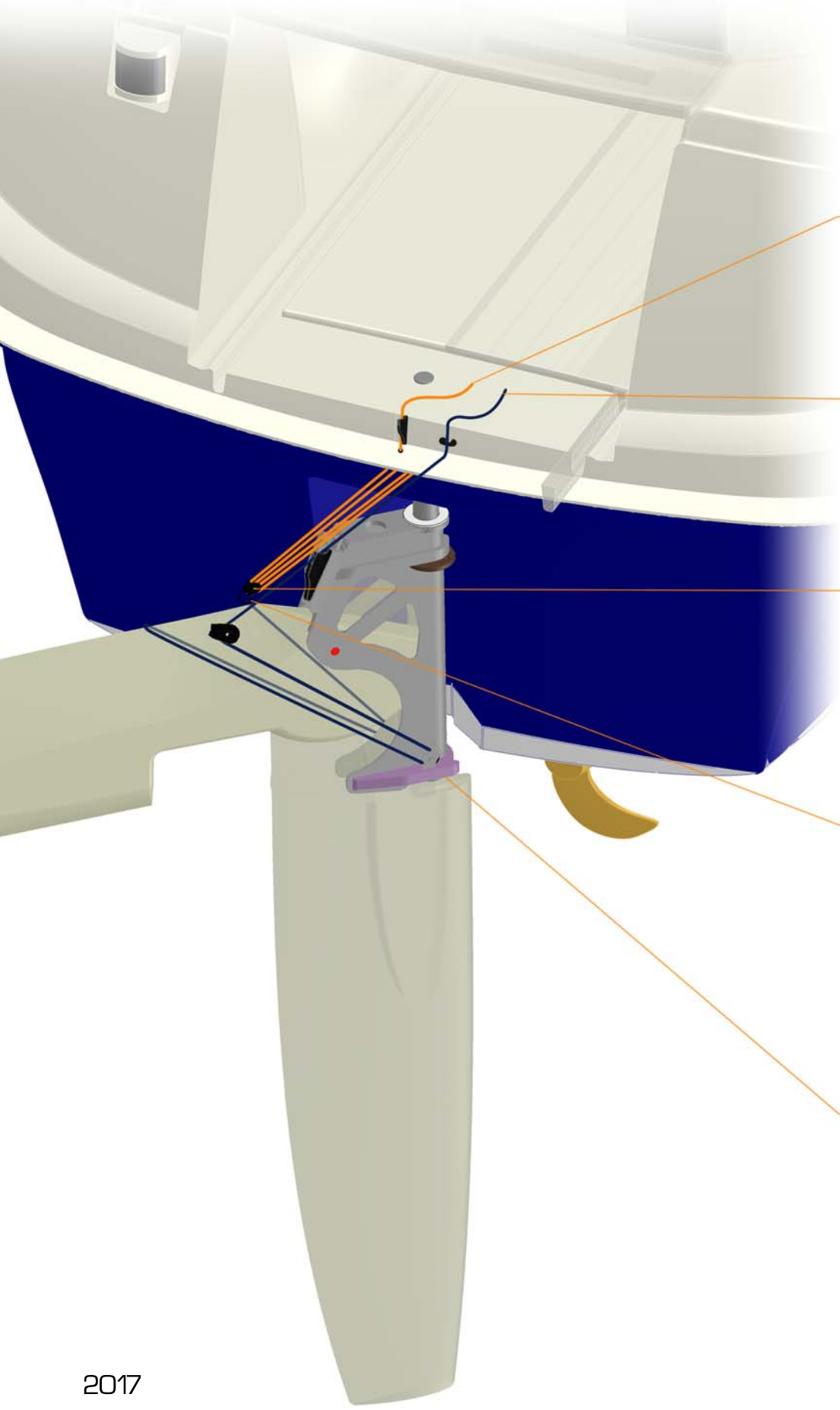

Rudder up line

6 mm Dynema - 4 meter long

Rudder down line

7 mm Dynema - 6,5 meter long - inside cockpit locker, use mainsheet winch to pull down tight

Pulleys

For the rudder-up-

line

Steel eye

Fastening points at the rudder

Bushing

Changerble bushing

2017

DRAGONFLY TRIMARANS

Freshwater-system Cold

Dragonfly 32

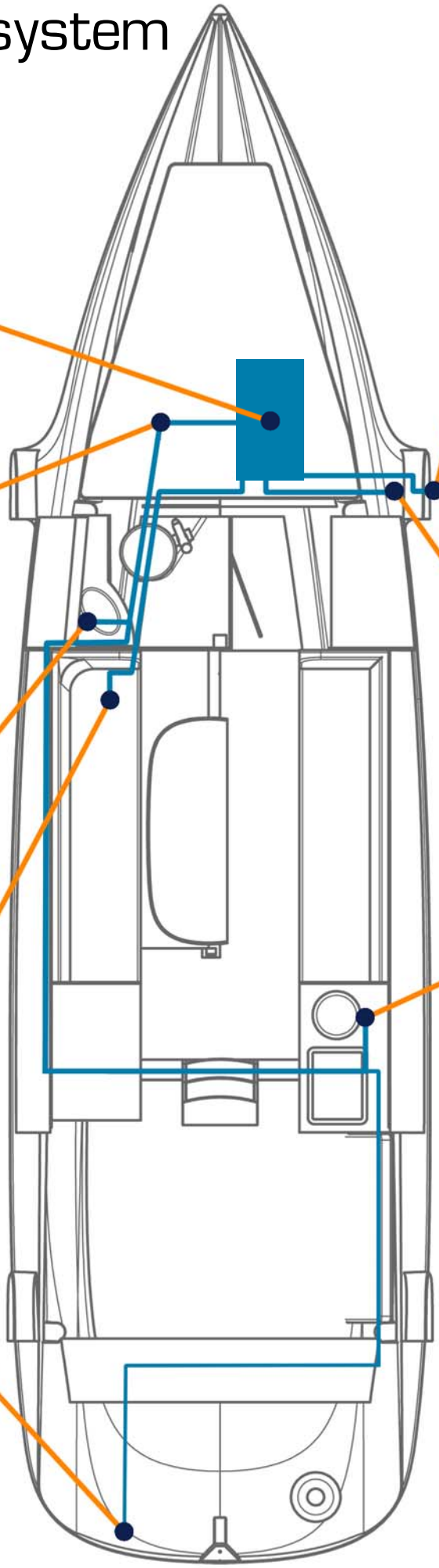

2017

DRAGONFLY TRIMARANS

Freshwater-system Hot

Dragonfly 32

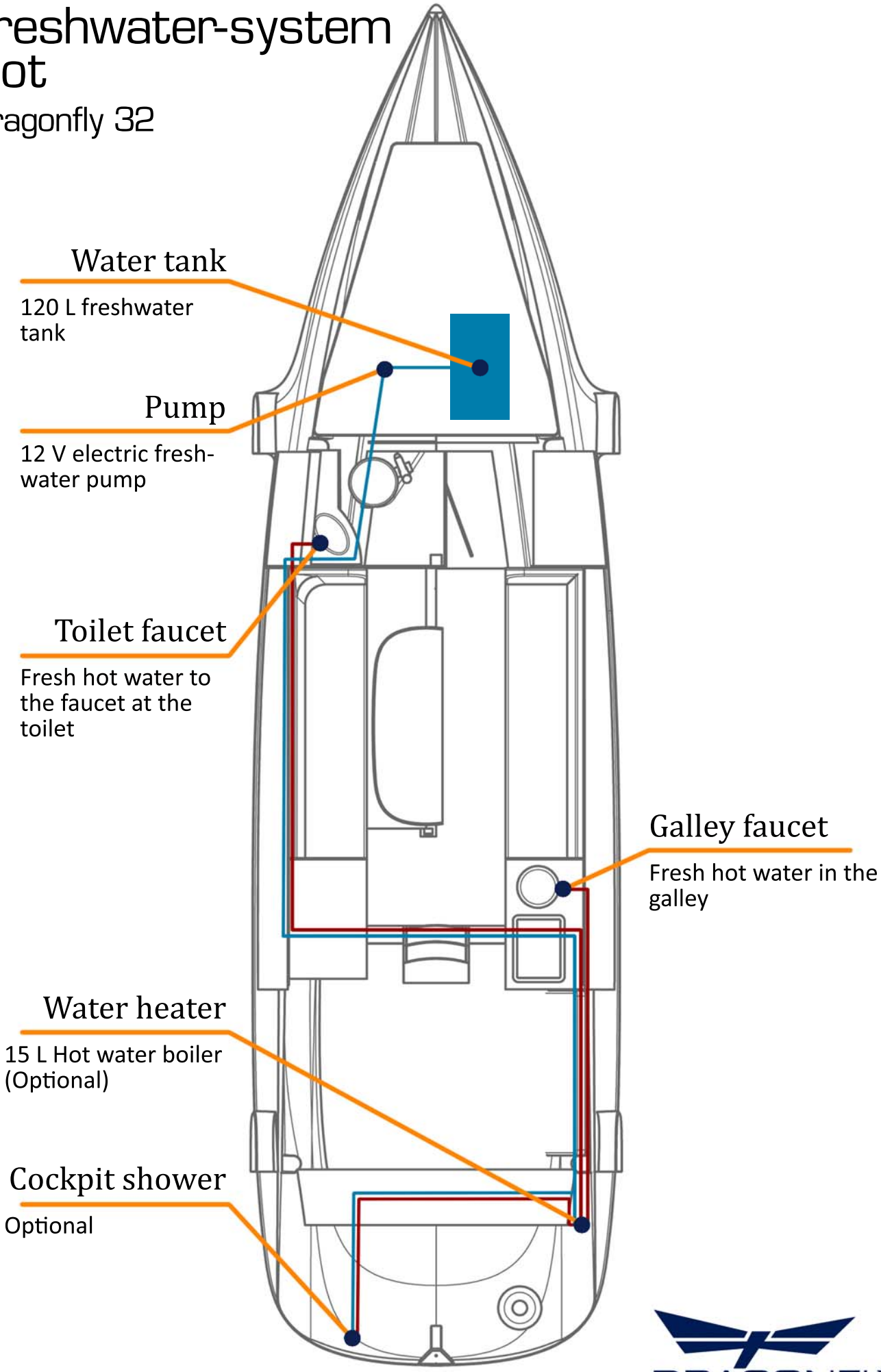

2017

DRAGONFLY TRIMARANS

Saltwater-system Optional

Dragonfly 32

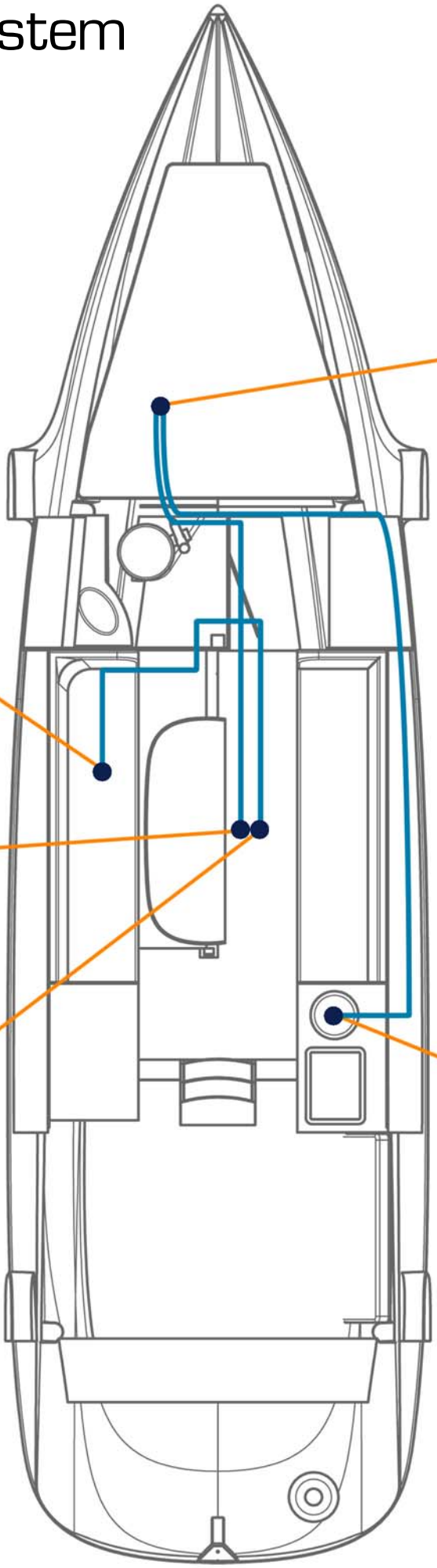

2017

DRAGONFLY TRIMARANS

Holdingtank/sea coarks

Dragonfly 32

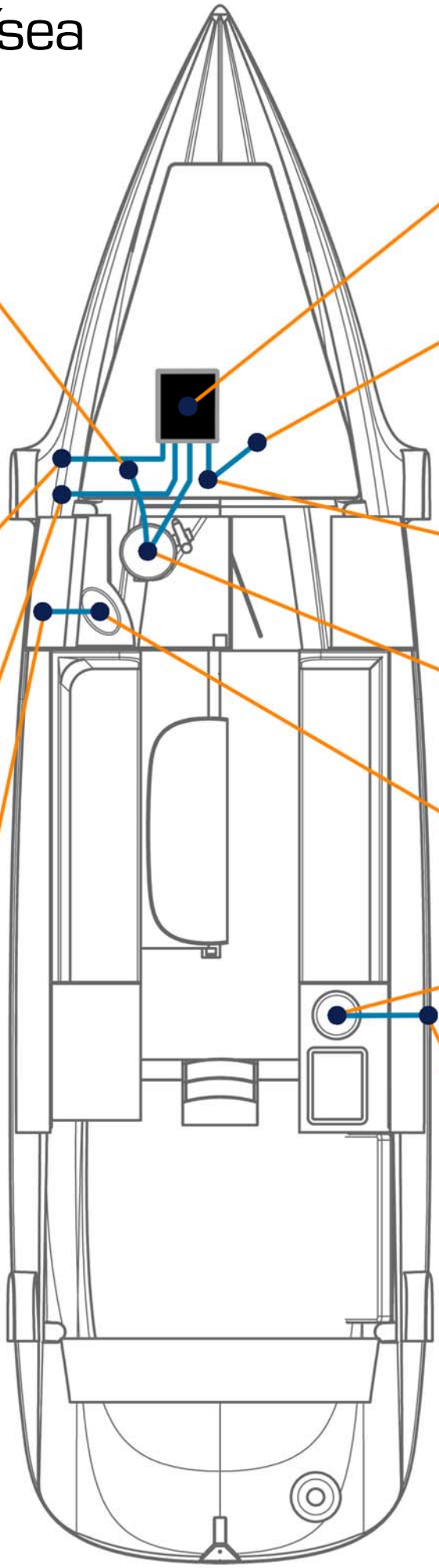

Holding tank

60 L holding tank, black-water only

Outlet holdingtank

Black water from the holdingtank via the manual pump to sea, 1 1/4” seacork

Saltwater in

Saltwater intake for toilet and opt. salt-water faucet in galley, 1/2” seacork

Manual pump

Manual blackwater pump, 1 1/4”

Deck outlet

Deck fitting for emptying holding tank in port

Toilet

Manual toilet

Air vent

Air vent for the holding tank on hull friboard

Toilet sink

Sink drain

Drain from toilet sink, above water-line

Galley sink

Galley sink drain

Drain from galley sink, above waterline

2017

DRAGONFLY TRIMARANS

Hull-fittings

Dragonfly 32

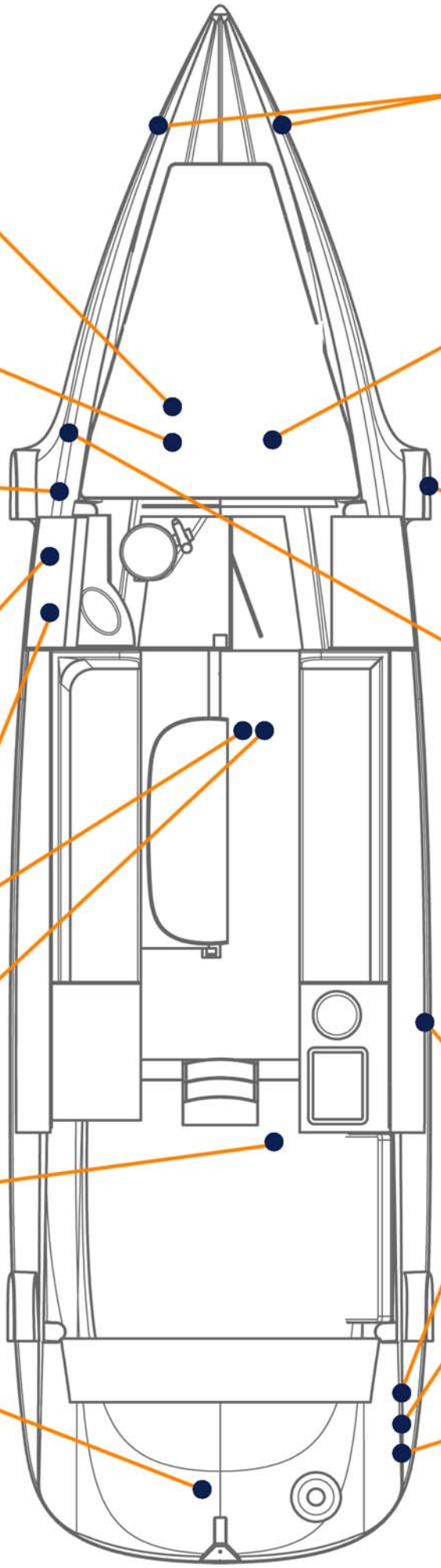

Outlet anchor room

Clamshell drain from the anchor compartment

Shower outlet

Shower bilge pump outlet

Outlet holdingtank

Black water from the holdingtank via the manual pump to sea, 1 1/4”

Intake toilet

1/2”

Air vent

Air vent for the holding tank

Air vent

Air vent for the water tank, above waterline

Watermaker out

Outlet from optional watermaker

Deck outlet

Deck fitting for emptying holding tank in port

Toilet sink drain

Above waterline

Saltwater intake

Watermaker in

Intake for optional watermaker

Drain galley sink

Above waterline

Transducer

Speed/depth transducer, in aft. cabin

Drain electric bilge

Above waterline

Drain manual bilge

Above waterline

Cooling water

Intake for cooling water for diesel engine

Drain electric bilge

Above waterline

2017

DRAGONFLY TRIMARANS

Diesel-system

Dragonfly 32

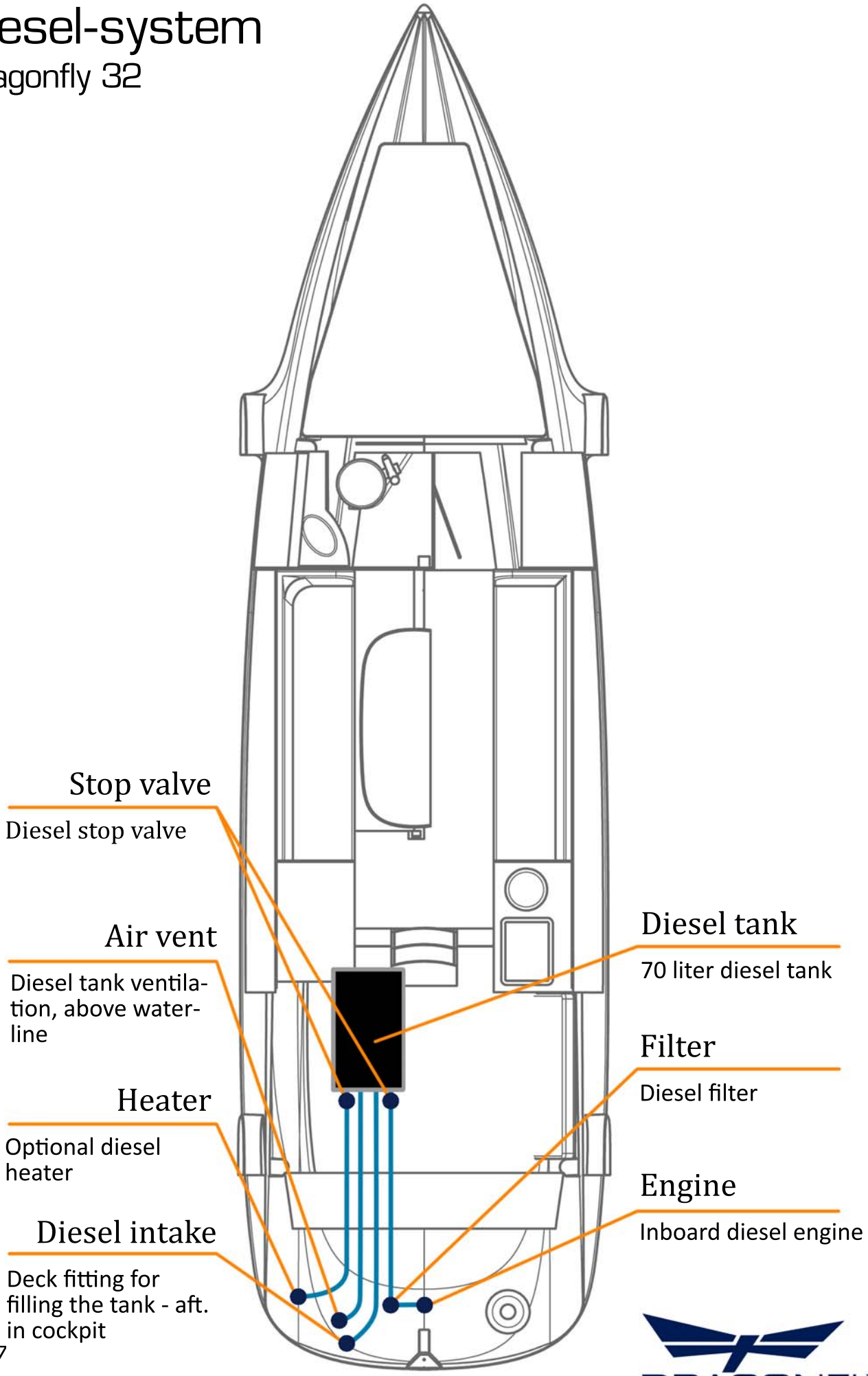

2017

DRAGONFLY TRIMARANS

Gas-system

Dragonfly 32

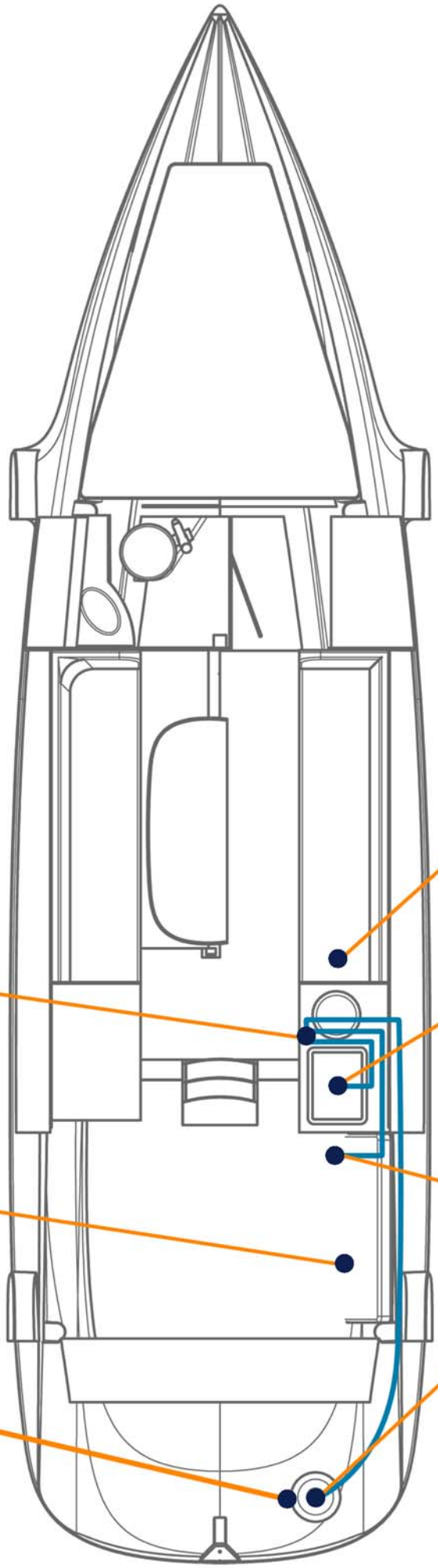

2017

DRAGONFLY TRIMARANS

PRACTICAL INFORMATION –
ON THIS BOAT IN PARTICULAR

Engine type: _____

Engine No: _____

Gelcoat RAL hull colour: _____

Gelcoat RAL deck colour: _____

Gelcoat RAL non-skid colour: _____

Propeller: *Type* _____ *Size* _____

Stripe work colour: _____

Epoxy barrier under water: _____

Antifouling: _____

Mast colour RAL No: _____

INFORMATION ABOUT PRODUCTS USED FOR DRAGONFLY

The standard maple interior, the panels are in strong laminate material and basically needs no maintenance. The maple wooden trim is more fragile but is varnished from the factory and only needs repair if the wood/varnish is damaged.

The optional Teak woodwork in the cabins is varnished with two-part satin varnish. To varnish again sand with grit 180 or finer sandpaper. You can use either one or two component varnish with satin finish.

Dragonfly is built of hand-laid, reinforced fibreglass and polyester/vinylester resin combined with 15-20 mm PVC sandwich foam core with closed cells, which do not absorb water. Therefore, the boat is at all times unsinkable.

For eventual repairs use ONLY products on polyester/vinylester basis. Epoxy can be used in an emergency, but cannot be cosmetically improved later with gelcoat.
If repairs are done where gelcoat finish is not needed or if the finish needs painting – epoxy resin is actually to be recommended.

Before any lamination repairs are done, the repaired area must be completely dry.

By delivery of a new boat from Quorning Boats, the yard does not calibrate electronic equipment.

It is the responsibility of the skipper/owner to ensure that all the electronics are calibrated and reliable.

BY ANY DAMAGE TO THE BOAT:

Contact your dealer or the yard for instructions. If not, you could endanger your safety and/or maybe even lose your warranty.

GELCOAT REPAIRS:
IMPORTANT – Successful repairs require dry weather and a temperature between +15° to max 30 degrees C.

- Ratio of hardener is min 2% and max 3%.
- Gel setting time is approx. half an hour.
- Never work in direct sun when applying gel coat or any resin repairs.

How to make gelcoat repairs:
- First sand the actual repair with grit 80.
- Then sand the area around it with grit 180-240.
- Apply gelcoat by 2 or 3 layers.
- When completely dry sand it down with 120-240, thereafter with 500 – 800 – 1,200.
- After that polish with rubber compound and finally wax the whole area.
- Use lots of ventilation, gloves, glasses, and dust mask.
- Keep children away.

WARNING
- The catalyst is a dangerous product and should not be left within children's reach.
- Avoid contact with skin.
- In case of contact, wash with soapy water and rinse liberally.

Clean all tools with acetone.

GENERAL SERVICING:

- Clean blocks and sheets well in freshwater regularly.
- Lubricate blocks and halyard stoppers every 2-3 months.
- Clean all tracks frequently where travellers are functioning. Also, the mast track.
- Min once a year clean and grease the winches and check the springs.
- Keep the sails covered at all times when not in use to protect from the sun.
- Keep the sails dry and rinse regularly with freshwater. If sails get damaged immediate repair is required.
- Let a sail maker check the sails once a year.
- Have the engine serviced min once a year and according to the manufacturer.
- Be sure to have antifreeze cooling on the engine.
- Check that all sea corks are working well.
- Empty water and holding tank before the winter.
- Empty the hot water boiler before the winter.
- Check engine oil.
- Check diesel fuel filter.
- Check zinc on propeller and engine shaft.
- When the boat is not used for some time fx like over winter, fill up the diesel tank 100% - and ask locally if diesel needs special extra treatment.
- Make sure always to keep the Teflon rings on the float decks clean. Often rinse this with just water. If they start squeezing (making noises), spray these with Teflon spray every now and then.
- Check all lines looks to be ok.
- Check that the handles on the hatches are not loose. If so, just tighten the screw on the "inside" of the handle.
- Once a year unscrew the float Moonlight /skylight handles (not the flush hatches) take it apart and on the outside fitting you see a smaller O-ring – this needs grease once a year.
- Check the seams on the trampolines and the cables on the trampolines and the Swing Wing system is ok. Any sailmaker can repair the trampolines.

Please note that this is only our simple and basic recommendation on what to check and service – there might be other special products on your boat that also needs attention and service.

SPRING CLEANING:

1. Exterior: Wash and wax the boat. (Do not wax the non-skid areas).
   Waxing is not needed if the boat was waxed just before the winter storage.
   Interior: Clean the boat everywhere.

2. Antifouling:
   Main hull. First wash the bottom of the boat with freshwater, if necessary, high-pressure washing. Let it dry out and apply antifouling with a lacquer roll – maybe sand the antifouling surface first.

   The centre board has normally enough antifouling for the first 3 to 4 seasons; you will then have to lift the boat with a crane, to clean and antifoul the centreboard.

   Copper coat only needs high-pressure cleaning and if the boat stay in the water, clean the Copper coat surface 2 or 3 times a year by hand with fx a sponge to clean pots, use the green “sanding” part on the sponge.

3. It is recommended that all blocks, batten cars are greased with Teflon type spray or fx the best is Mc-Lube from Harken.

4. Mast, boom, and head foil must be washed and cleaned. If you do not immediately succeed in cleaning the aluminium, you can use polish cream.

5. Wash and rinse the batten cars well, incl. the mast track.

CLEANING UP FOR THE WINTER:

1. You are recommended to wash the boat completely clean, wax and polish all surfaces except the non-skid areas.

2. Make sure to take off the sails, sprayhood, and cockpit tent. Wash and rinse out dirt and salt. Everything must be completely dry, before stowed away for the winter and kept in a dry place.

3. Cushions:
   For cleaning cushions, you can remove the cover by unfastening the zip on the back of the cushion. For washing or dry-cleaning, check which material your cushions are made of, before cleaning. Best to store the cushions in dry surroundings. If the cushions stay inside the boat – set them up vertically.

4. Various steel wires can be washed in warm soap and water, rinsed clean, dried, and afterwards wiped with an oilcloth.

5. All ropes and blocks should be washed in warm soap and water, rinsed and dried.

6. Rigging and boom:
   Make sure all lines and halyards are intact. Should a halyard have a failure at the end, turn it over. Every year all halyards and reefing lines should be shortened approx. 25 cm.

7. The water tank must be emptied and cleaned – it is easy accessible in the front cabin under the V berth.

8. During the winter, open all lockers for best ventilation and make sure that the boat is well ventilated.

9. The engine:
   Please contact your local engine dealer.

10. The marine batteries can stay in the boat over the winter. But better charge them full before the winter and charge them up once a month.

11. Dry out the hulls completely to avoid frost damage and check all bilges in all 3 hulls are dry, also the forward and aft bilges in the floats.

12. Make sure that ventilation is good before storing the boat for the winter. The best thing to do is to store the boat indoors for the winter period, if you use a canvas or plastic type cover make sure it does not touch the boat and hulls as this might scratch the boat.

13. Flush the holding tank and empty this before you haul out the boat – best min. two times.

Any damages and lacks on boat, sails or instrumentation should be fixed in the autumn; everybody can give the best service at that time of the year.

IMPORTANT MAINTENANCE INFORMATION ON THE RIGGING:

Always check the rigging, halyards, reefing lines, water stays and rudder down line, as well as the cables and lines operating the swing wing system.

Minimum once a year shorten all halyards, reefing lines, and swing wing lines by approx 25 cm. After some years, you can turn them around or replace the lines.

Water stays we recommend changing every 7 years using the same quality of products, or at max. 15,000 NM.

Side stays should be changed latest after 10 years or by max 15,000 NM.

Diamond stays on the mast should be changed latest after 15 years or by max 20,000 NM.

Never climb the rigging when the boat is in folded position.

Tension on the rigging, please see rig diagram.

Never change the tension on the diamonds without checking tension with a tension meter according to rig tension diagram, changing the rig tension can cause the mast to break.

Never drill holes in the carbon mast section without asking your local dealer or Quorning Boats beforehand.

NEVER wrap the mast in any plastic, as this can cause the paint to bubble. If wrapping is needed, use breathable textile.

We recommend changing the trampolines after 10 years in strong sun climates and elsewhere after max 12 years.

IMPORTANT INFORMATION ON THE ENGINE:

Inboard engine:

- Check zinc on the sail drive every 6 months.
- Sail drive rubber gasket must be changed every 7 years.
- Service engine according to the manufacturer's service programme.
- Always check that the engine gets cooling water by checking visually that the exhaust has water coming out.
- Always keep a spare impeller and drive belt on board.
- Check the level of oil.
- Check the level of cooling water in the engine and the plastic bowl.
- Always make sure to have antifreeze in the cooling water in cold climate.

IT IS ALWAYS THE OWNER´S AND OR SKIPPERS RESPONSBUILITY TO CHECK THE CONDITION OF THE BOAT AT ALL TIMES.

We wish you some great and fantastic sailing with your Dragonfly 32, and if you respect what is informed in this Owner´s Manual you will enjoy and understand the boat even better.

We wish you happy sailing and great fun.

Electric-system

Dragonfly 32

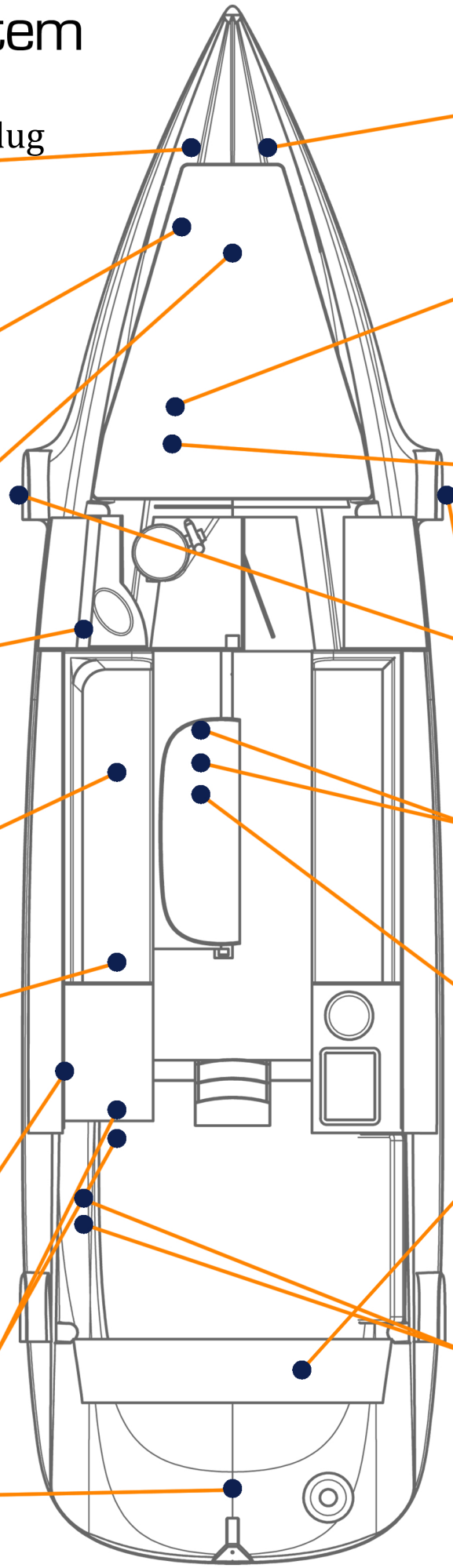

Shore power plug

Shorepower-system
(110/220 V)
(Optional)

Fuse

Shore power fuse
and circuet breaker

Bow truster

Folding swing-
bowtruster inc.
extra battery (Op-
tional)

Socket

110/220 V

Watermaker

Optional

HFI relay

110/220 V

Socket

110/220 V

12 V board

Main switch board

Engine

12 V engine start
and charger

Anchor winch

12 V electric winch
tional)

Saltwater pump

12 V electric pump (O
tional)

Freshwater pump

12 V electric pump

Solar panel cable

Solar panel on floats
and deck (Optional)

Standard battery

2 x Varta 70 AMPS for
Aux.

Battery

50 AMPS - inboard
engine only

Socket - Hotwater boiler

110/220 V

Switch

Engine main switch,
12 V bypas and fuse for
electric deck winch

2017

DRAGONFLY
TRIMARANS

Rope diagram

Dragonfly 32 Swing Wing Evolution Version

Text	Material	No of lines	Diameter	Length in metres
Main sheet	Polyester	1	10 mm	30 m
Backstay	Dyneema	2	10 mm	20 m
Backstay with eye-splicing in both ends	Dyneema / Carbon	2	8 mm	4.4 m incl. eye-splicing
Genoa sheet	Polyester	1	12 mm	24 m
Main traveller outhaul	Polyester	1	8 mm	14 m
Genoa traveller outhaul	Dyneema	2	8 mm	13.5 m
Asymmetric spinnaker sheet	Polyester	1	10 mm	46 m
Genoa furler	Dyneema	1	8 mm	18 m
Tack line	Dyneema	1	8 mm	20 m
Swing Wing line	Dyneema	2	8 mm	27 m
Barberhaul	Polyester	2	8 mm	26 m
Centerboard up	Dyneema	1	8 mm	10 m
Centerboard down	Dyneema	1	8 mm	12 m
Preventer/boomvang	Polyester	2	8 mm	15 m
Lazy-Jack	Polyester	1	6 mm	18 m
Lazy-Jack on spreader	Polyester	2	6 mm	2.5 m
Mooring lines	Polyester	4	16 mm	14 m
Main halyard	Dyneema	1	8 mm	57 m
Genoa halyard	Dyneema	1	10 mm	36 m
Spinnaker halyard	Dyneema	1	8 mm	41 m
Code 0 halyard	Dyneema	1	8 mm	38 m
Reef 1	Dyneema	1	8 mm	20 m
Reef 2	Dyneema	1	8 mm	35 m

OWNER'S LIST

First owner:

Name: _____

Address: _____

City: _____

Country: _____

Date of purchase: _____

Second owner:

Name: _____

Address: _____

City: _____

Country: _____

Date of purchase: _____

Third owner:

Name: _____

Address: _____

City: _____

Country: _____

Date of purchase: _____

Keep this manual in a safe place onboard and hand it over to the new owner, if you sell the boat!!

INTERNATIONAL MARINE CERTIFICATION INSTITUTE
International Non-Profit Association

Rue Abbé Cuypers 3 / B-1040 Bruxelles / Belgique / Tel +32 2 741 6836 / Fax +32 2 741 2418
www.imci.org / info@imci.org

EXAMINATION REPORT

We hereby certify that the product below manufactured by

Quorning Boats ApS

Skærbækvej 101 - DK-7000 FREDERICIA - DENMARK

Recreational Craft

DRAGONFLY 32 (INBOARD)

Scope	Design & Construction
Module type	A1
Craft type	Sail Multi Hull
Craft design category	A or B
Length of hull [m]	9,75
Beam of hull (Craft) [m]	8,00
Draught, maximum [m]	1,95
Loaded displacement mass [kg]	5110
Maximum rated engine power [kW]	22
Number of persons recommended	5 or 7
Maximum recommended load (builder's plate) [kg]	1180
Certificate number	BQUORN009

meets the requirements of the Recreational Craft Directive 2013/53/EU in accordance with the Essential Requirements 3.2 for Stability and Freeboard and 3.3 for Buoyancy and Flotation

BELAC

NBN ISO/CEI 17065 accredited organisation - Certificate No 228-PROD

INTERNATIONAL MARINE CERTIFICATION INSTITUTE IMCI BRUSSELS

Ulrich Heinemann (Managing Director)
for EU - Notified Body : 0609
2019-10-15

This certificate is valid for craft identified as
2020 Model

This document relates only to the EU Recreational Craft Directive. Different legislation may apply to some components fitted on-board the watercraft.

INTERNATIONAL MARINE CERTIFICATION INSTITUTE
International Non-Profit Association

Rue Abbé Cuypers 3 / B-1040 Bruxelles / Belgique / Tel +32 2 741 6836 / Fax +32 2 741 2418
www.imci.org / info@imci.org

EXAMINATION REPORT

Annex to Statement BQUORN009

This annex is an integral part of the present certificate, and may not be separated from it

Related standards, rules and regulations used for the assessment

EN ISO 12217-2:2017	Small craft - Stability and buoyancy assessment and categorisation - Part 2: Sailing boats of hull length greater than or equal to 6 m (ISO 12217-2:2015)

NBN ISO/CEI 17065 accredited organisation - Certificate No 228-PROD

Warranty Papers

RAYMARINE or B&G electronics

If Raymarine or B&G electronics has been mounted on our boat, Quorning Boats has registered the serial number according to your hull number for an extended warranty.
You will receive a registration confirmation from Raymarine or B&G/Navico per email.

How to proceed by warranty claims on electronics

You have to contact Raymarine or B&G/Navico directly, referring to your instrument registration.

Raymarine

Please contact your national agent or Raymarine distributor. They will be able to inform nearest Raymarine Service.

B&G/Navico

Please use the online service/dealer locator and contact your local dealer directly.